fantasia.be

light designers

premium collection

Fantasia Light Designers
Premium Collection

Designed with passion in Belgium.

The lights in this catalogue are part of the Fantasia Premium Collection. They are the result of a team of light designers with over 60 years of experience.

We have a passion for beautiful, timeless, flexible and affordable designs.

Discover our craftsmanship on www.fantasia.be

Welcome to our new Premium catalog.

This catalogue represents a snapshot of the current collection.
Novelties will be introduced throughout the year.
Please use the following QR-code to access our premium website, which is frequently updated.

Premium website:

In this new catalogue we introduce QR codes for every product family.
Scan the QR codes, with the camera of your smartphone, to gain access to:

- Detailed technical information about the item
- Complete overview of items within a product family
- Extra files, instructions, IES, LDT, ...
- Demonstration and tutorial videos
- ...

PREMIUM Catalogue EDITION 2023

PRODUCT COORDINATION
Fantasia Verlichting NV

DESIGN
Tim Vanhoucke

Aeon
LED spots AR111 → page 004

Box
LED spots AR111 → page 010

Infinitus
Profile for tracks → page 016

Lopal
LED spots → page 026

Nobu
E27 pendants → page 044

Nysit
LED spots GU10 → page 048

Orbit
LED spots → page 062

Pure
LED lighting → page 076

Talu
LED wall light → page 098

Xandar
LED track lighting → page 100

Xolo
LED pendants → page 104

Zolan
LED spots GU10 → page 108

Zoom
LED downlights GU10 → page 116

Zoom AR111
LED downlights AR111 → page 128

Hybriz gen 2
LED modules → page 132

Bulbs
LED modules and bulbs → page 140

Coming soon
→ page 142

AEON

- Unique and modern design with powerful replaceable LED spots
- Rotate and tilt spot heads freely in any direction
- Warm white light, powerful lumen output
- Complete with replaceable dimmable driver and AR111 LED spots

White version:

4014320	AEON 1 light, 1x AR111 LED 12,4 Watt
4014321	AEON 2 light, 2x AR111 LED 12,4 Watt
4014322	AEON 3 light, 3x AR111 LED 12,4 Watt
4014323	AEON 4 light, 4x AR111 LED 12,4 Watt

AEON

- Unique and modern design with powerful replaceable LED spots
- Rotate and tilt spot heads freely in any direction
- Warm white light, powerful lumen output
- Complete with dimmable driver and AR111 LED spots

Black version:

4014325	AEON 1 light, 1x AR111 LED 12,4 Watt
4014326	AEON 2 light, 2x AR111 LED 12,4 Watt
4014327	AEON 3 light, 3x AR111 LED 12,4 Watt
4014328	AEON 4 light, 4x AR111 LED 12,4 Watt

AEON

AR111 LED 12,4 Watt 30° 2700K (8202705)
650 Lumen with lens cover
1386 Lumen without lens cover

AR111 LED bulb overview: page 140

Dimmable bulb 0-100% *

Dimmable driver included (3419052)

Material: aluminium

Colour: matte white
matte black

Power: 220-240 Volt

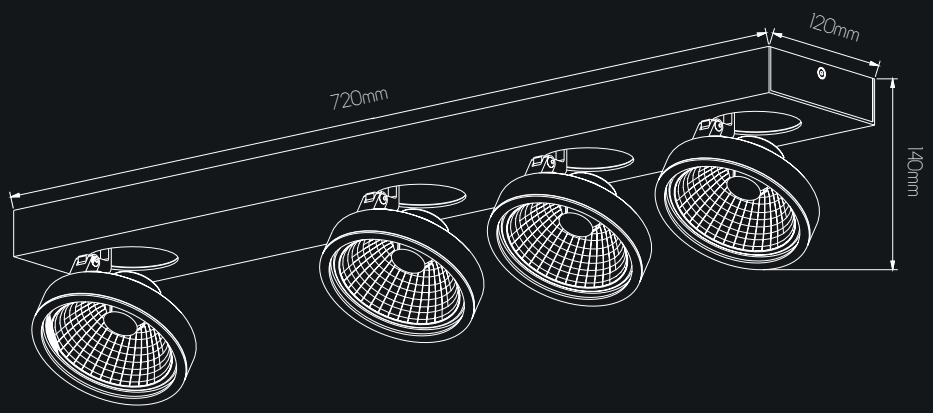

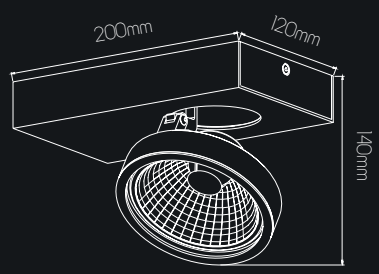

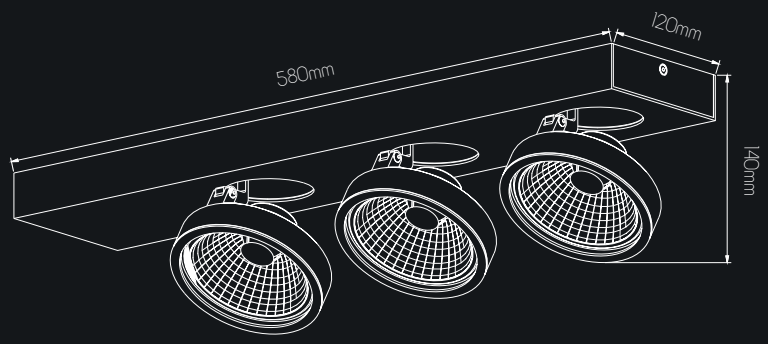

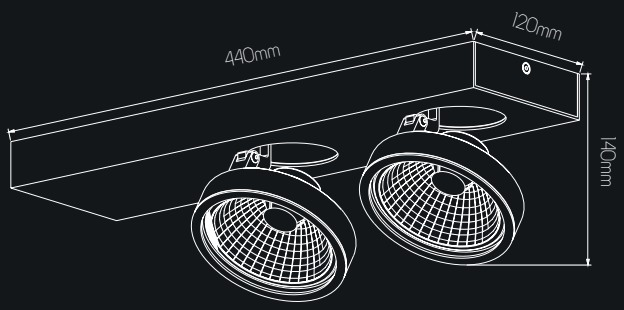

* Bulbs dimmable when used with the correct LED dimmer.

Box

- Industrial design with powerful replaceable LED spots
- Rotate and tilt spot heads freely in any direction
- Warm white light, powerful lumen output
- Complete with dimmable driver and AR111 LED spots

White version:

4014300	BOX 1 light round, 1x AR111 LED 12,4 Watt
4014301	BOX 1 light square, 1x AR111 LED 12,4 Watt
4014302	BOX 2 light, 2x AR111 LED 12,4 Watt
4014303	BOX 3 light, 3x AR111 LED 12,4 Watt
4014304	BOX 4 light, 4x AR111 LED 12,4 Watt

Box

- Industrial design with powerful replaceable LED spots
- Rotate and tilt spot heads freely in any direction
- Warm white light, powerful lumen output
- Complete with dimmable driver and AR111 LED spots

Black version:

4014305	BOX 1 light round, 1x AR111 LED 12,4 Watt
4014306	BOX 1 light square, 1x AR111 LED 12,4 Watt
4014307	BOX 2 light, 2x AR111 LED 12,4 Watt
4014308	BOX 3 light, 3x AR111 LED 12,4 Watt
4014309	BOX 4 light, 4x AR111 LED 12,4 Watt

Box

AR111 LED 12,4 Watt 30° 2700K (8202705)
650 Lumen with lens cover
1386 Lumen without lens cover

AR111 LED bulb overview: page 140

Dimmable bulb 0-100% *

Dimmable driver included (3419052)

Material: aluminium

Colour: matte white
matte black

Power: 220-240 Volt

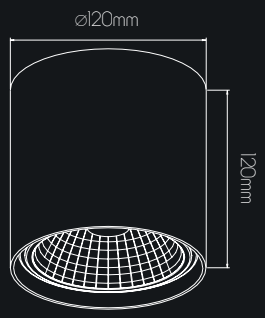

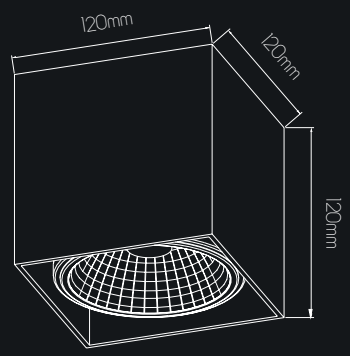

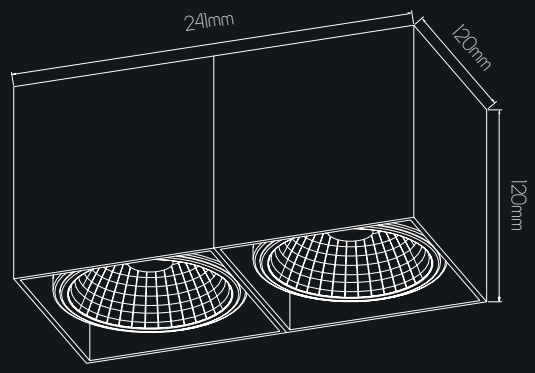

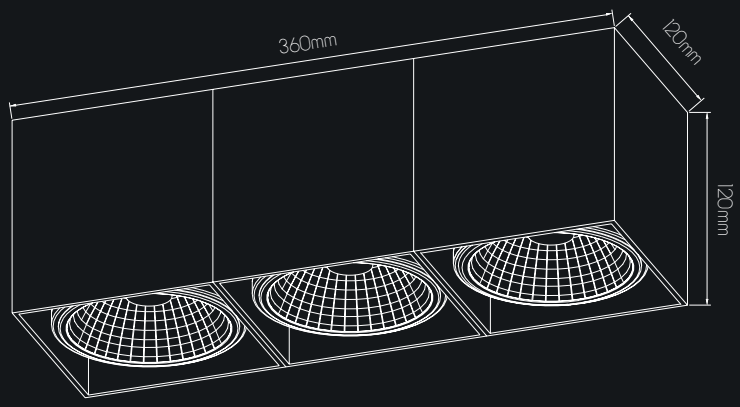

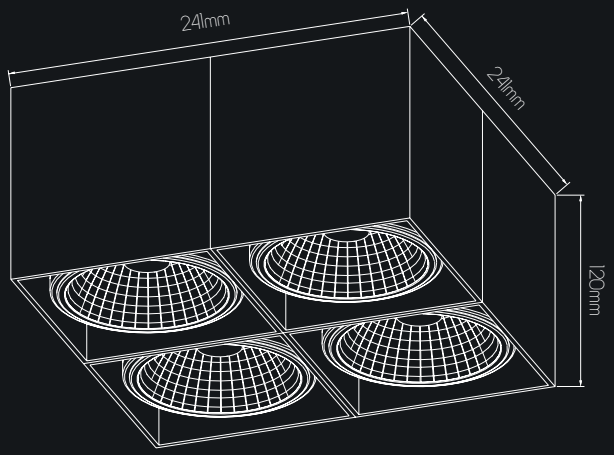

* Bulbs dimmable when used with the correct LED dimmer.

INFINITUS

- Modern sleek profile + monophase tracksystem
- Can be installed directly on the ceiling or as a pendant
- Compatible with monophase trackspots and pendants
- Easy to expand (up to 20m max)
- Max watt for total connected lights = 1200W

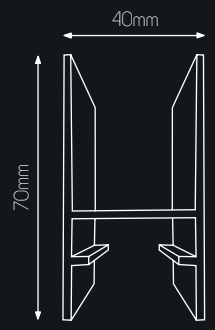

Profile + monophase track + power supply + accessories:

TR0200W INFINITUS Profile 1,2m white
TR0200B INFINITUS Profile 1,2m black
TR0201W INFINITUS Profile 1,8m white
TR0201B INFINITUS Profile 1,8m black
TR0202W INFINITUS Profile 2,9m white
TR0202B INFINITUS Profile 2,9m black
accessories: power supply, track endcap x 1, profile endcaps x2

Profile + monophase track, extension:

TR0203W INFINITUS Profile 1,2m white
TR0203B INFINITUS Profile 1,2m black
TR0204W INFINITUS Profile 1,8m white
TR0204B INFINITUS Profile 1,8m black
TR0205W INFINITUS Profile 2,9m white
TR0205B INFINITUS Profile 2,9m black

Profile, empty (no internal track, no accessories):

TR0210W INFINITUS Profile 3m white
TR0210B INFINITUS Profile 3m black

Internal connection pieces:

TR0111B/W Monophase track linear connector
TR0211B/W INFINITUS 60mm connection piece

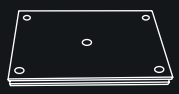

TR0202B
Infinitus profile
+ power supply 2,9m
TR0131B
Nysit track spot
+3427181
Nysit cilinder gold

INFINITUS

- Modern sleek profile + monophase tracksystem
- Can be installed directly on the ceiling or as a pendant
- Compatible with monophase trackspots and pendants
- Easy to expand (up to 20m max)
- Max watt for total connected lights = 1200W

Connection pieces:

TR0206W INFINITUS T-connector white
+ choose according to earth wire position:
TR0115W Monophase T-connector earthwire inside
TR0116W Monophase T-connector earthwire outside

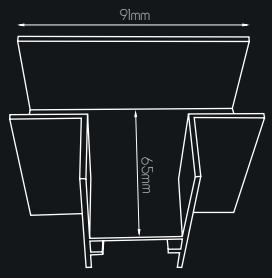

TR0206B INFINITUS T-connector black
+ choose according to earth wire position:
TR0115B Monophase T-connector earthwire inside
TR0116B Monophase T-connector earthwire outside

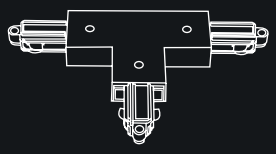

TR0207W INFINITUS L-connector white
+ choose according to earth wire position:
TR0113W Monophase L-connector earthwire outside
TR0114W Monophase L-connector earthwire inside

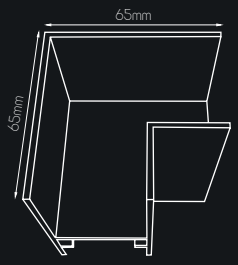

TR0207B INFINITUS L-connector black
+ choose according to earth wire position:
TR0113B Monophase L-connector earthwire outside
TR0114B Monophase L-connector earthwire inside

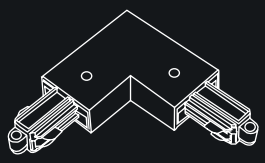

Endcaps:

For Infinitus profile:
TR0213W INFINITUS Profile endcap white
TR0213B INFINITUS Profile endcap black

For internal monophase track:
TR0120W Monophase track endcap white
TR0120B Monophase track endcap black

TR0203B
Infinitus profile extension 1,2m
TR0202B
Infinitus profile + power supply 2,9m
TR0150B
Lopal track spot
TR0207B
Infinitus L-connector
+TR0113B
IF track L-connector
4014365
Lopal pendant
+TR0123B
IF track adapter

INFINITUS

- Modern sleek profile + monophase tracksystem
- Can be installed directly on the ceiling or as a pendant
- Compatible with monophase trackspots and pendants
- Easy to expand (up to 20m max)
- Max watt for total connected lights = 1200W

Pendant installation:

TR0208W INFINITUS Suspension kit white
TR0208B INFINITUS Suspension kit black

Suspension kits consist of:
2x 5m steelcable
2x steelcable ceiling fixations
2x 60mm internal profile connection pieces

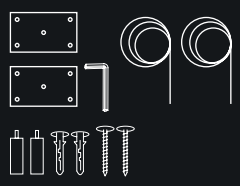

TR0209W INFINITUS Power supply kit white
TR0209B INFINITUS Power supply kit black

Power supply kits consist of:
1x canopy
1x 5m powercable
(maximum Amps (A) 10A, cable thickness 1.5mm)

1x 60mm internal profile connection piece
2x powercable strain relief

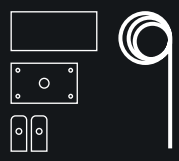

Extras:

TR0212 INFINITUS Screw guide

Included with every profile, helps guide the screws inside the profile, during the installation.

TR0214W INFINITUS Safety cover white, 1m
TR0214B INFINITUS Safety cover black, 1m

The safety cover protects the internal monophase track from external foreign objects and fingers.
Recommended when installing the Infinitus on a wall.

TR0209B
Infinitus power supply
+ canopy
TR0208B
Infinitus suspension kit
TR0202B
Infinitus profile
+ power supply 2,9m
TR0131B
Nysit track spot
+3427181
Nysit cilinder gold
eception

INFINITUS

Scan the QR codes below to get access to movies and an overview of the different parts available for the INFINITUS monophase tracksystem.

DEMO MOVIE

HOW TO MOVIES

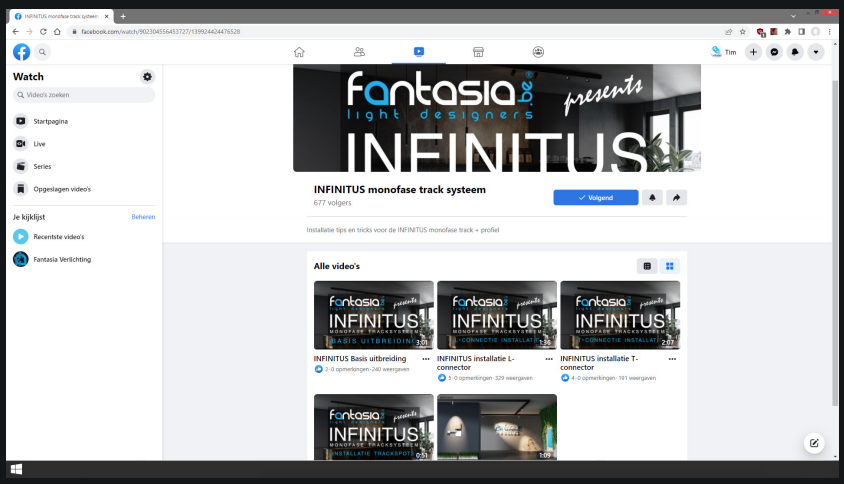

OVERVIEW PARTS

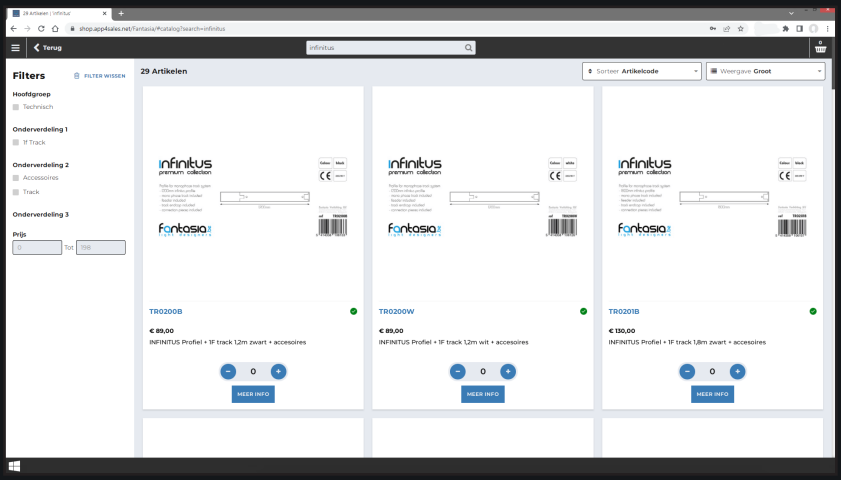

INFINITUS

Compatible trackspots and pendants for the INFINITUS + monophase track from our premium collection.

LOPAL trackspots
LOPAL pendant, requires a track adapter (ref TR0123)

More information about this series p. 026

NYSIT trackspots

More information about this series p. 048

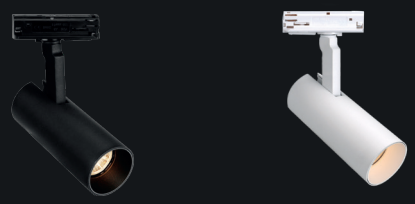

XANDAR trackspots

More information about this series p. 100

ORBIT trackspots
ORBIT pendants

More information about this series p. 062

INFINITUS

Compatible trackspots for the INFINITUS + monophase track from our deco collection.

LITHIUM

- Modern monophase trackspot
- Warm white light (2700K), high lumen output
- Also available in dim-to-warm (3000K - 2000K)

TR0140B	LITHIUM 12 Watt LED trackspot black
TR0140W	LITHIUM 12 Watt LED trackspot white
TR0141B	LITHIUM 12 Watt LED dim-to-warm trackspot black
TR0141W	LITHIUM 12 Watt LED dim-to-warm trackspot white

TSURU

- Decorative series with bronze accent and smoke grey glass
- Pendants, wall light, floor and table lamp, and ceiling light available
- G9 LED bulb included

TR0134B	TSURU track spot, G9 LED included

XZIBIT

- Decorative trackspot
- Black with bronze details
- Ready for GU10 (recommended bulb 8202652)

TR0133B	XZIBIT trackspot black / bronze, GU10 excluded

INFINITUS

Compatible pendants for the INFINITUS + monophase track from our deco collection.
Almost all LED, E14 and E27 pendants in our deco collection can be installed on the INFINITUS.
How? Remove the canopy of the pendant and install a track adapter (TR0123).

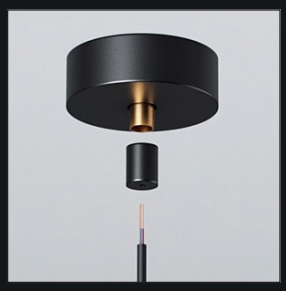

Scan the QR code to take a look at our deco catalog.
More pendants can be found in the chapter 'Modern'.
If you are unsure if a specific pendant can be used with the INFINITUS, contact us for more information.

LOPAL

- Modern and slim design
- Small canopy (2,5 cm wide - 4 cm high)
- Built-in dimmable AC COB LED
- Warm white light, high lumen output

White version:

4014350	LOPAL 1 light, complete with 1x 4,5 Watt AC COB LED
4014351	LOPAL 2 light, complete with 2x 4,5 Watt AC COB LED
4014352	LOPAL 3 light, complete with 3x 4,5 Watt AC COB LED
4014353	LOPAL 4 light, complete with 4x 4,5 Watt AC COB LED

Gold inserts for all Lopal spots available separately (4014369)

LOPAL

- Modern and slim design
- Small canopy (2,5 cm wide - 4 cm high)
- Built-in dimmable AC COB LED
- Warm white light, high lumen output

Black version:

4014360	LOPAL 1 light, complete with 1x 4,5 Watt AC COB LED
4014361	LOPAL 2 light, complete with 2x 4,5 Watt AC COB LED
4014362	LOPAL 3 light, complete with 3x 4,5 Watt AC COB LED
4014363	LOPAL 4 light, complete with 4x 4,5 Watt AC COB LED

Gold inserts for all Lopal spots available separately (4014369)

Gold insert available
separately (4014369)

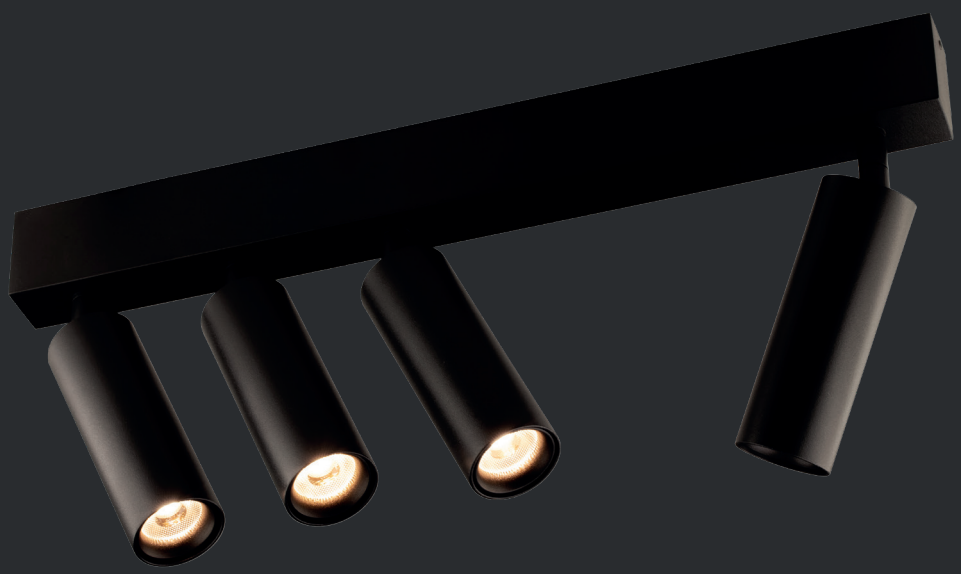

LOPAL

- Modern and slim design
- Small canopy with light switch (2,5 cm wide - 4 cm high)
- Flexible neck
- Built-in dimmable AC COB LED
- Warm white light, high lumen output

Wall light:

4014354	LOPAL 1 light, wall light, complete with 4,5 Watt AC COB LED, white
4014364	LOPAL 1 light, wall light, complete with 4,5 Watt AC COB LED, black

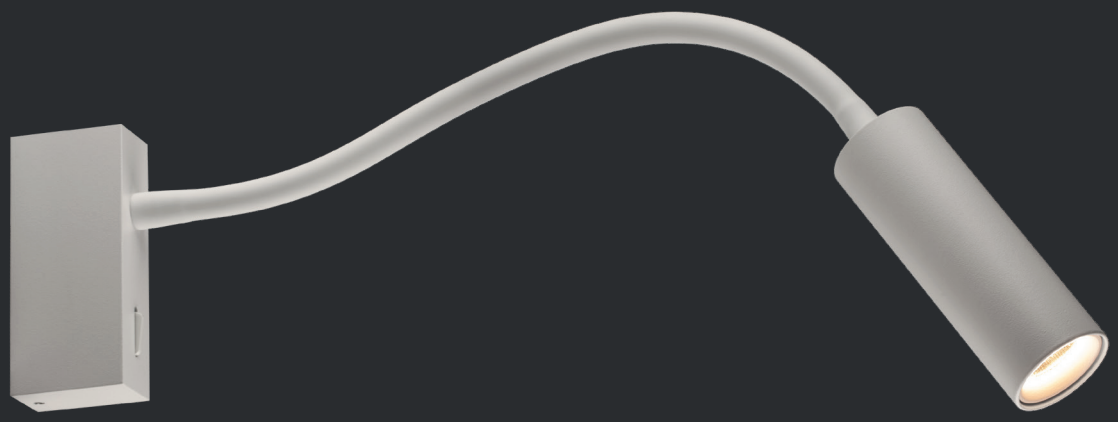

LOPAL

- Modern and slim design
- Can easily be converted for use with tracks
  1 phase track adapter: TR0123W, TR0123B - sold separately
  3 phase track adapter: TR0023W, TR0023B - sold separately
- Built-in dimmable AC COB LED
- Warm white light, high lumen output

Pendant:

4014355	LOPAL 1 light, pendant complete with 4,5 Watt AC COB LED, white
4014365	LOPAL 1 light, pendant complete with 4,5 Watt AC COB LED, black

LOPAL

- Modern and slim design
- Built-in dimmable AC COB LED
- Warm white light, high lumen output

Pendant:

4014358	LOPAL 5 light, pendant complete with 5x 4,5 Watt AC COB LED, white
4014368	LOPAL 5 light, pendant complete with 5x 4,5 Watt AC COB LED, black

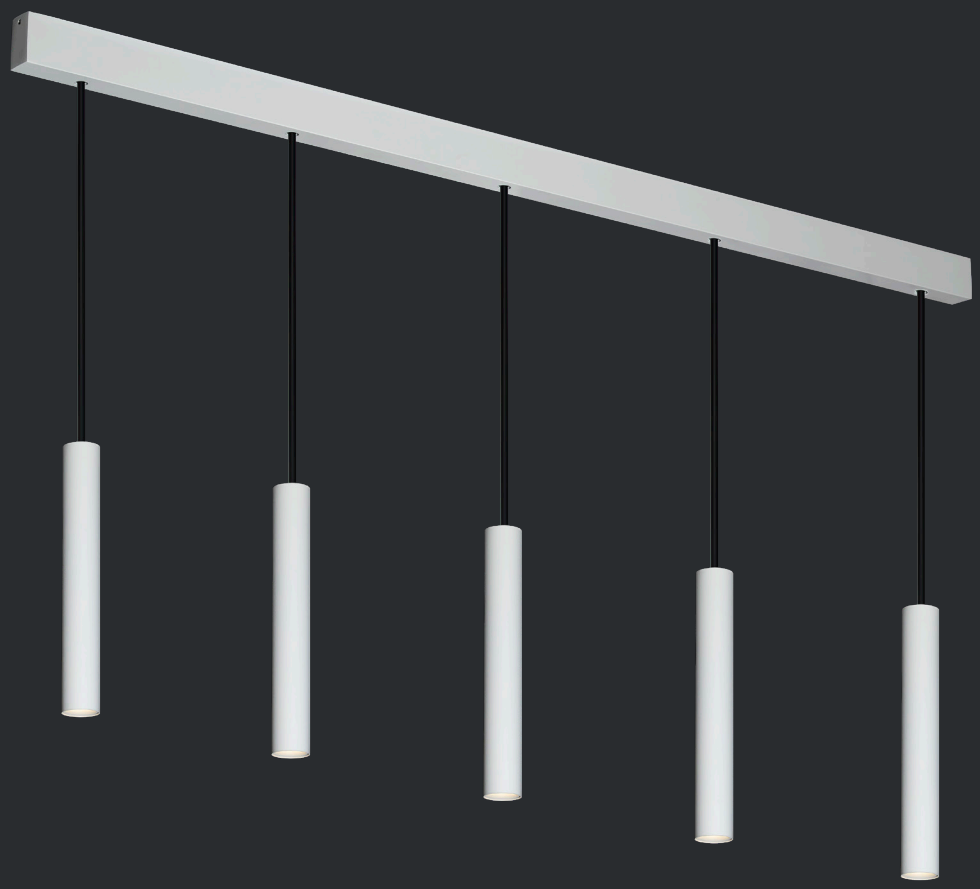

LOPAL

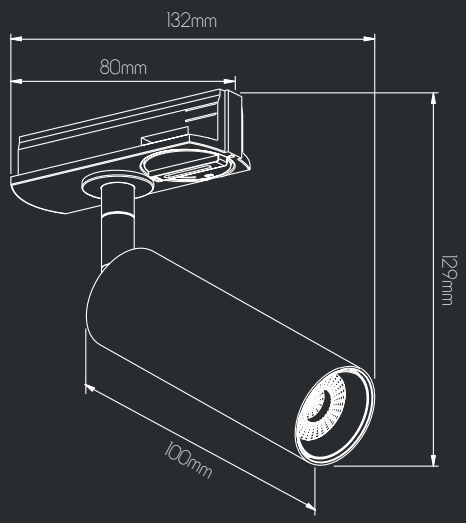

- Modern and slim design
- Made for monophase tracks
- Built-in dimmable AC COB LED
- Warm white light, high lumen output

Track light:

TR0150W	LOPAL 1 light, for 1-F tracks, complete with 4,5 Watt AC COB LED, white
TR0150B	LOPAL 1 light, for 1-F tracks, complete with 4,5 Watt AC COB LED, black

220-230V
2A

220-230V
2A

LOPAL

- Insert for Zoom recessed spots (see page 123)
- Can also be installed in Zolan spots (see page 108)
- Built-in dimmable AC COB LED
- Warm white light, high lumen output

Lopal insert:

4014113	LOPAL insert, complete with 4,5 Watt AC COB LED, matte white
4014114	LOPAL insert, complete with 4,5 Watt AC COB LED, matte black

LOPAL

- Modern and slim design
- Table lamp with touch dimmer 0-100%
- Built-in dimmable LED
- Warm white light, high lumen output

Table lamp:

4014356	LOPAL 2 light, complete with 2x 4 Watt LED, white
4014366	LOPAL 2 light, complete with 2x 4 Watt LED, black

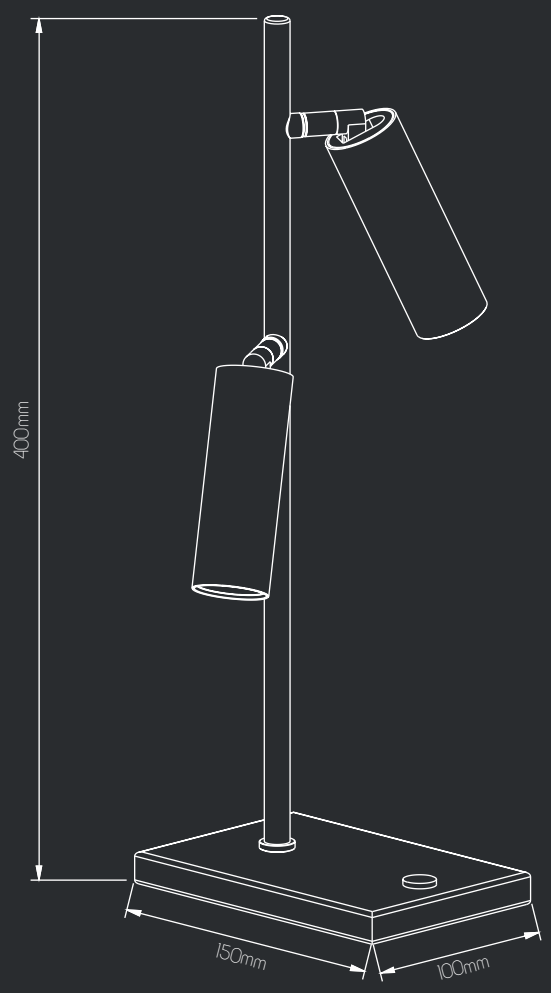

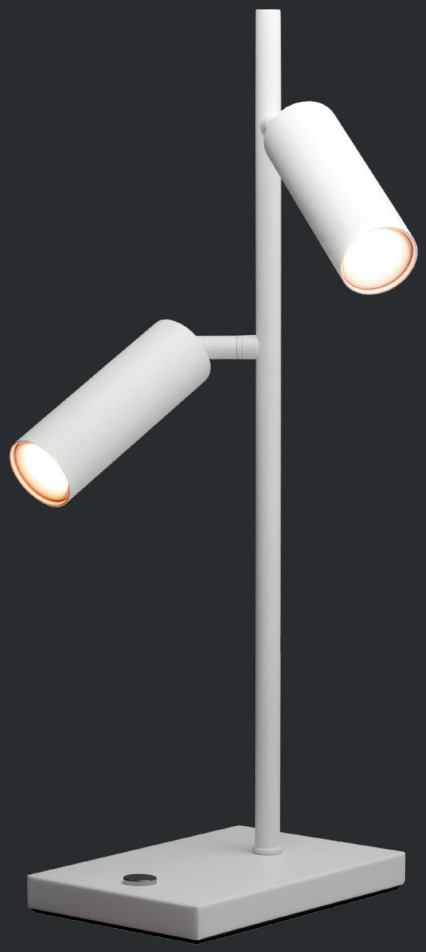

LOPAL

- Modern and slim design
- Floor lamp with touch dimmer 0-100%
- Built-in dimmable LED
- Warm white light, high lumen output

Floor lamp:

4014357	LOPAL 3 light, complete with 3x 4 Watt LED, white
4014367	LOPAL 3 light, complete with 3x 4 Watt LED, black

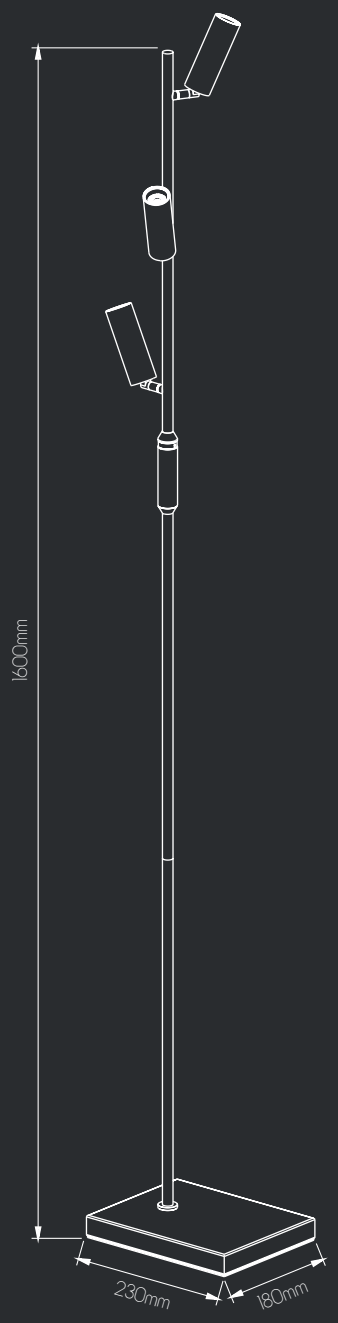

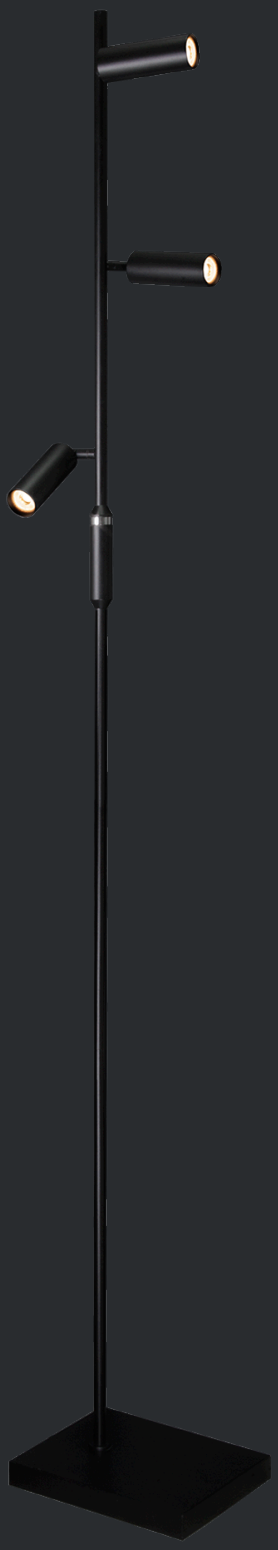

LOPAL

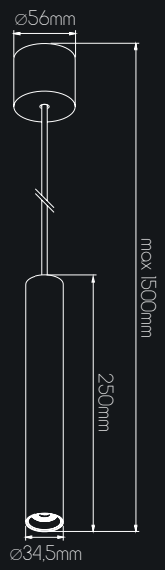

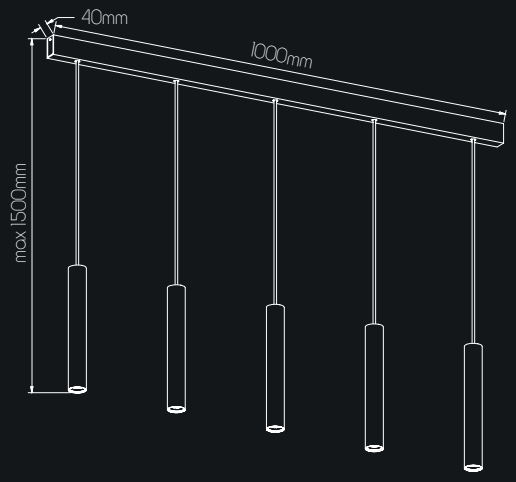

LED for spots
LED 4,5 Watt 2700K
300 Lumen (90°)

LED for table and floorlamp
LED 4 Watt 2700K
320 Lumen (90°)

CRI›80

Dimmable 0-100%*

Material: aluminium
Colour: matte white, matte black

Power: 220-240 Volt

Reflectors: 35° and 60°
(Standard reflector spot: 35°, pendant: 60°)

Gold insert: 4014369

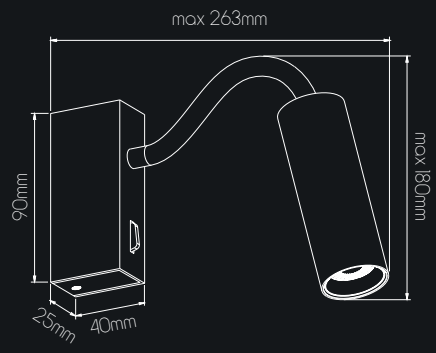

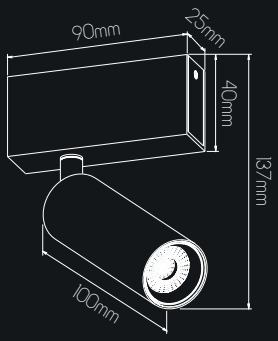

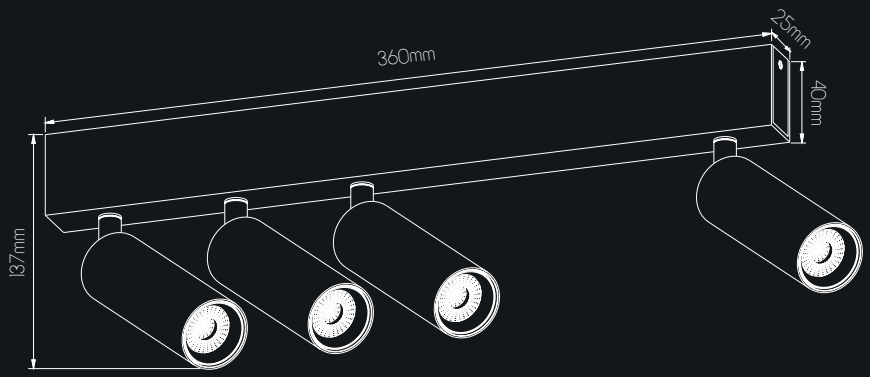

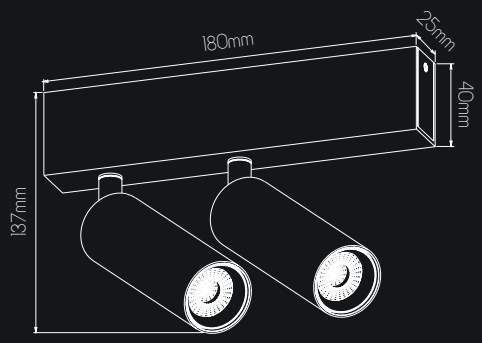

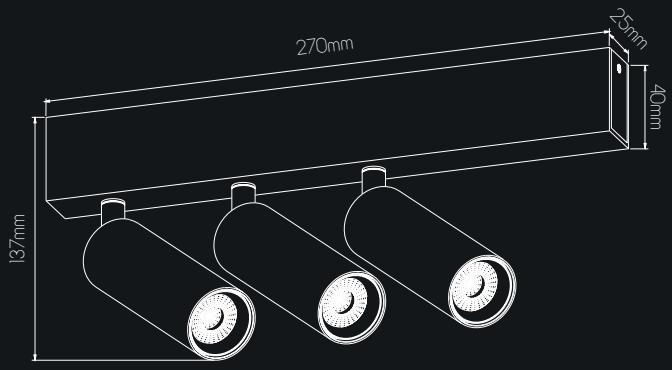

* Dimmable when used with the correct LED dimmer.

NOBU

- Modern pendant ready for E27 LED retrofit bulbs
- Available completely in white or black with bronze accent
- Impressive size, 60cm diameter

Available versions:

3432160	NOBU Pendant E27 white
3432161	NOBU Pendant E27 black / bronze

NOBU

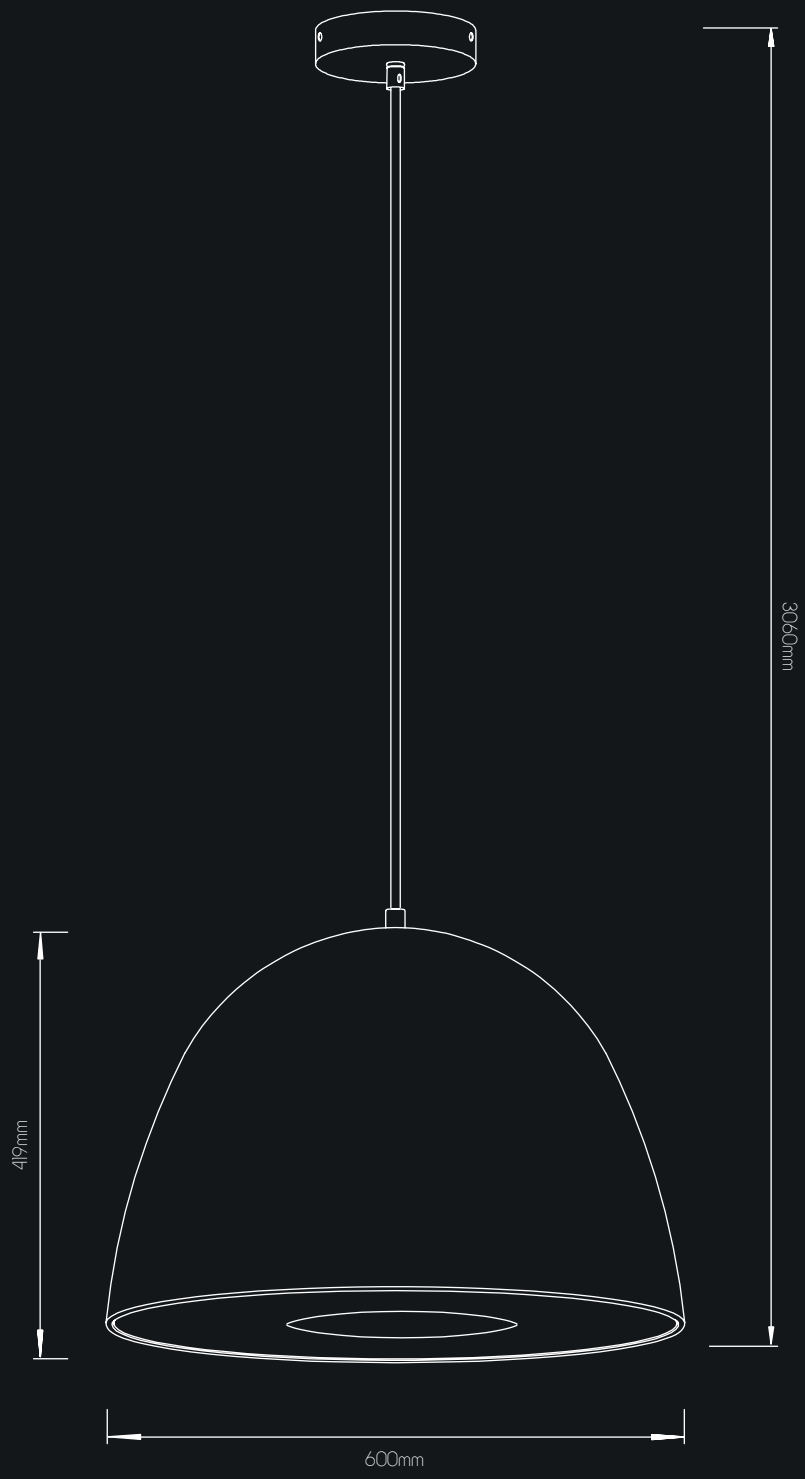

Ready for E27 LED retrofit bulbs

Material: aluminium

Colour: matte white
matte black + bronze

Power: 220-240 Volt

NYSIT

- Complete with dimmable and replaceable LED spots
- Warm white light
- Cover available in black, white, concrete look
- Cilinders available in black, white, aluminium, concrete look, antique copper and gold leaf
- The cilinders and cover can be customized and painted in any RAL colour (on request)
- The base of the fixture is always black

Premade - black base, white cover, white cilinders:

3427091	NYSIT 1 light, 1x GU10 LED 4,5 Watt included
3427092	NYSIT 2 light, 2x GU10 LED 4,5 Watt included
3427093	NYSIT 3 light, 3x GU10 LED 4,5 Watt included
3427094	NYSIT 4 light, 4x GU10 LED 4,5 Watt included

NYSIT

Premade - black base, black cover, black cilinders:

3427101	NYSIT 1 light, 1x GU10 LED 4,5 Watt included
3427102	NYSIT 2 light, 2x GU10 LED 4,5 Watt included
3427103	NYSIT 3 light, 3x GU10 LED 4,5 Watt included
3427104	NYSIT 4 light, 4x GU10 LED 4,5 Watt included

NYSIT

Premade - black base, white cover, black cilinders:

3427081	NYSIT 1 light, 1x GU10 LED 4,5 Watt included
3427082	NYSIT 2 light, 2x GU10 LED 4,5 Watt included
3427083	NYSIT 3 light, 3x GU10 LED 4,5 Watt included
3427084	NYSIT 4 light, 4x GU10 LED 4,5 Watt included

Premade:

3427105 NYSIT 7 light, 7x GU10 LED 4,5 Watt included
3427195 NYSIT 7 light, 7x GU10 LED 4,5 Watt included

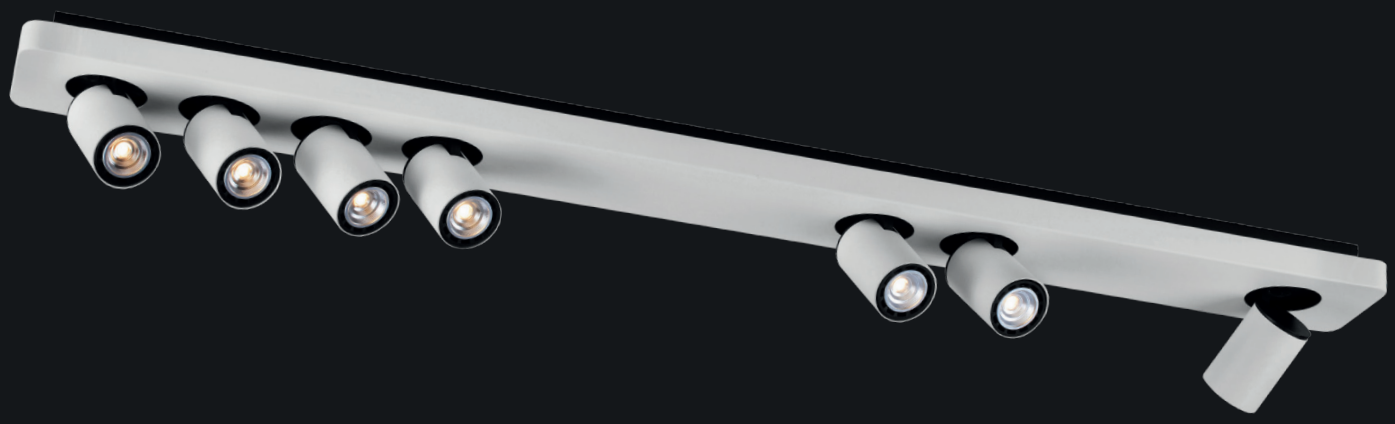

NYSIT

Custom-made
Choose and combine different colours for the cilinders and cover, to create your own Nysit version.

Covers :	White	Black	Concrete
1 light	3427165	3427166	3427185
2 light	3427168	3427169	3427186
3 light	3427171	3427172	3427187
4 light	3427174	3427175	3427188

Cilinders :

3427177	white
3427178	black
3427179	aluminium
3427181	gold leaf
3427182	concrete look
3427183	antique copper

Base (bulbs included) **:**

3427160	1 light base
3427161	2 light base
3427162	3 light base
3427163	4 light base

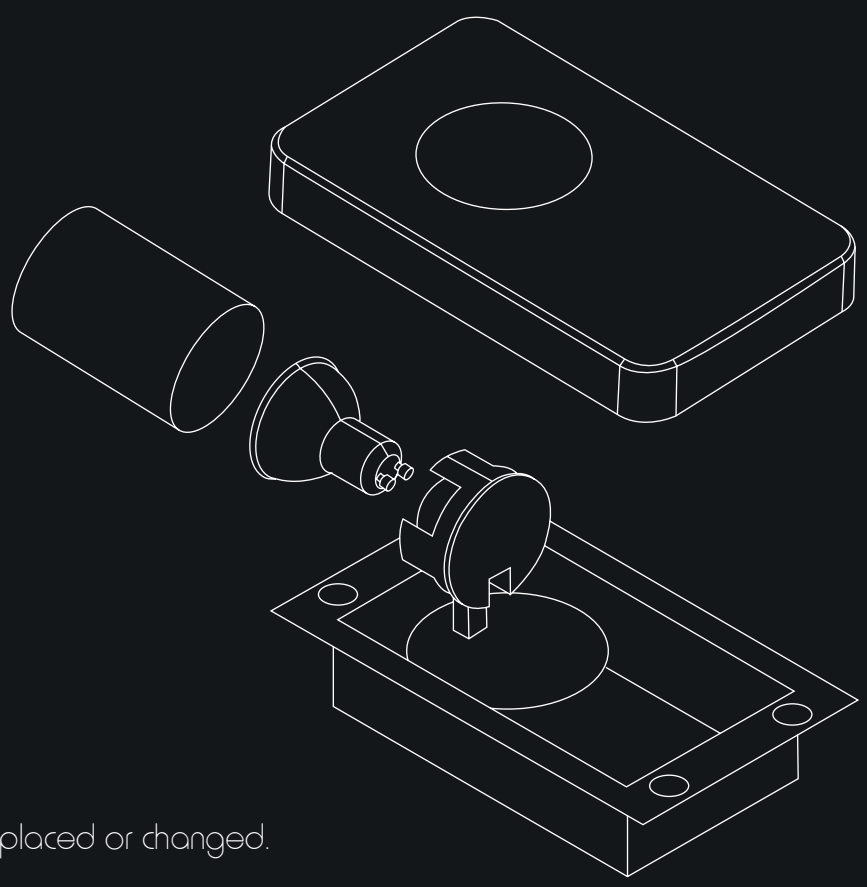

Easy installation :
Attach base to ceiling.

Attach cover to base using preinstalled magnets.

Put light bulbs in.

Slide cilinder into place over light bulb.

Bulbs, cover and cilinders are easily replaced or changed.

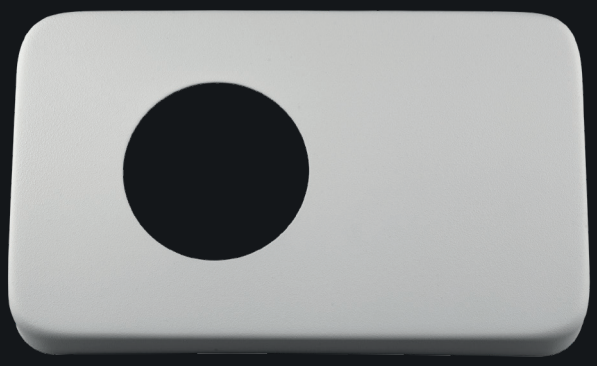

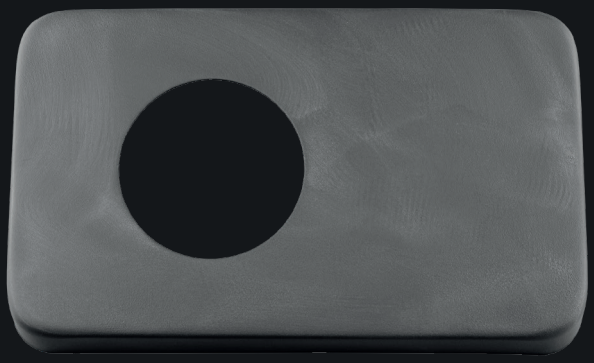

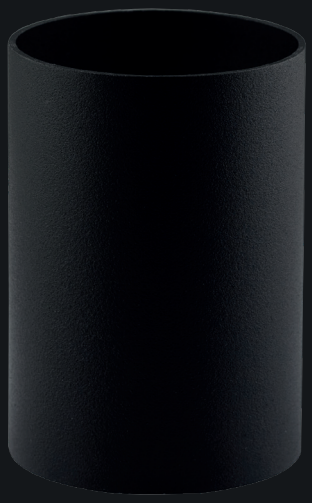

NYSIT

Custom-made - black base, choose a cover colour, choose the cilinders:

base: 3427160, cover concrete: 3427185, cilinder concrete: 3427182, 1 light, 1x GU10 LED 4,5 Watt included
base: 3427161, cover black: 3427169, cilinder white: 2x 3427177, 2 light, 2x GU10 LED 4,5 Watt included
base: 3427162, cover concrete: 3427187, cilinder concrete: 3x 3427182, 3 light, 3x GU10 LED 4,5 Watt included
base: 3427163, cover black: 3427175, cilinder aluminium: 4x 3427179, 4 light, 4x GU10 LED 4,5 Watt included

Custom-made - black base, choose a cover colour, choose the cilinders:
base: 3427160, cover black: 3427166, cilinder gold: 3427181, 1 light, 1x GU10 LED 4,5 Watt included
base: 3427161, cover black: 3427169, cilinder aluminium: 2x 3427179, 2 light, 2x GU10 LED 4,5 Watt included
base: 3427162, cover black: 3427172, cilinder white: 3x 3427177, 3 light, 3x GU10 LED 4,5 Watt included
base: 3427163, cover white: 3427174, cilinder gold: 4x 3427181, 4 light, 4x GU10 LED 4,5 Watt included

NYSIT

Custom-made - black base, choose a cover colour, choose the cilinders:
base: 3427160, cover white: 3427165, cilinder bronze: 3427183, 1 light, 1x GU10 LED 4,5 Watt included
base: 3427161, cover black: 3427169, cilinder bronze: 2x 3427183, 2 light, 2x GU10 LED 4,5 Watt included
base: 3427162, cover white: 3427171, cilinder bronze: 3x 3427183, 3 light, 3x GU10 LED 4,5 Watt included
base: 3427163, cover black: 3427175, cilinder white: 4x 3427177, 4 light, 4x GU10 LED 4,5 Watt included

- Ready for GU10 LED spots (recommended bulb 8202650)
- Made for monophase tracks
- Cilinders available in black, white, aluminium, concrete look, antique copper and gold leaf

Premade:

TR0131B	NYSIT track spot black, GU10 LED excluded
TR0131W	NYSIT track spot white, GU10 LED excluded

NYSIT

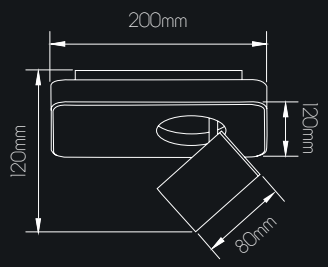

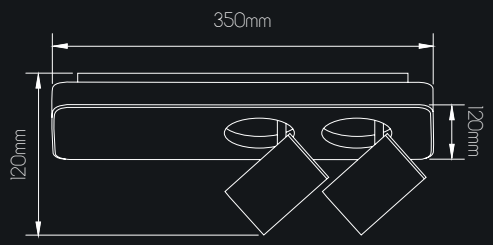

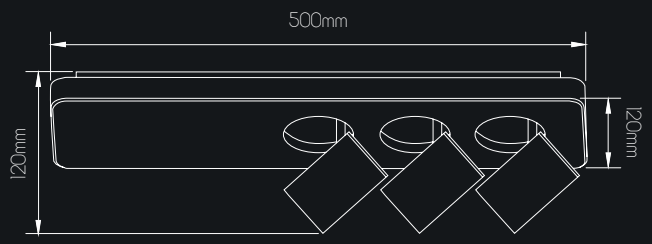

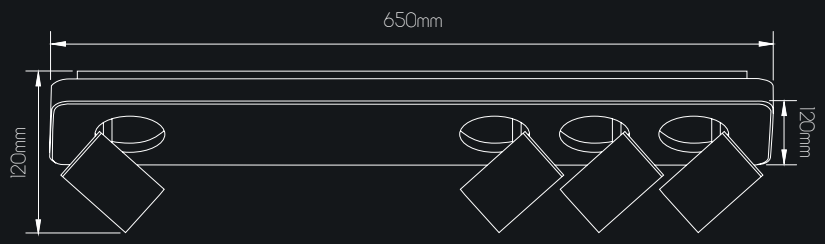

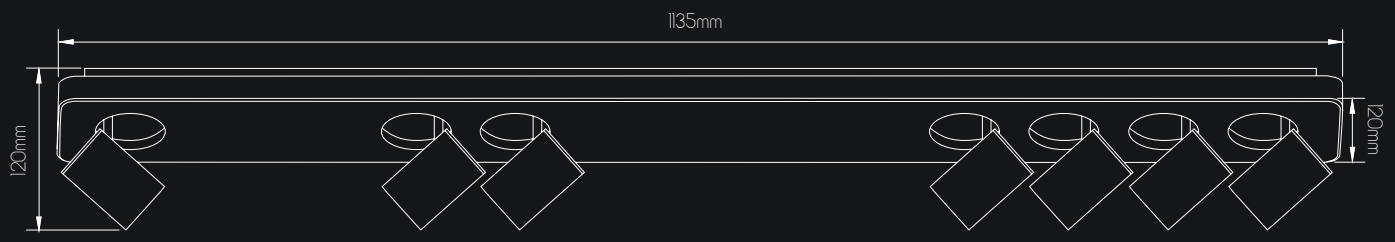

GU10 LED (8202650)
4,5 Watt 246 Lumen (90°) 2700K
CRI >90

Dimmable bulb 0-100% *

Material: aluminium and steel

Colour: choose pre-made models -or- pick and match cilinder and cover colours to create your own version

Power: 220-240 Volt

* Bulbs dimmable when used with the correct LED dimmer.

ORBIT

The ORBIT is a series of lighting fixtures with multi-functional optics and different kinds of profiles.

Available as spotlight and pendant for monophase tracks, and as wall light and ceiling pendant. Easily switch between 6W and 9W on the LED chip. The base of the ORBIT is always black, choose the correct optic and a corresponding insert, to create a light that suits your needs.

The ORBIT is dimmable, has warm white light 2700K, and a CRI >90.

4 different profiles and optics to choose from:

BIG LENS

The BIG LENS features a large and flat optic, it is a three-quarters spherical accessory with a minimum beam angle of 10°.
Optics available in 10°, 20°, 36° and 60°

MINI LENS

The MINI LENS is a spherical accessory with a mini recessed anti-glare reflector.
Optics available in 18°, 30°, 42° and 55°
Inserts available in different colours, gold, white, black and specular.

FLOOD LENS

The FLOOD LENS is a spherical accessory providing ambient lighting and flood lighting with a milky white diffuser optic (150°).

DECORATIVE LENS

The DECORATIVE LENS is a spherical accessory featuring flat cilinder optics with anti-glare and a decorative reflector.
Optics available in 15°, 24°, 36° and 60°
Inserts available in different colours, gold, white, black and specular.

ORBIT

The ORBIT is a series of lighting fixtures with multi-functional optics and inserts.

ORBIT

BIG LENS

The BIG LENS features a large and flat optic, it is a three-quarters spherical accessory with a minimum beam angle of 10°.
Optics available in 10°, 20°, 36° and 60°

ORBIT BASE

TR0143B	ORBIT Trackspot 6W/9W 2700K Dimmable, black
TR0144B	ORBIT Track pendant 6W/9W 2700K Dimmable, black
8203430	ORBIT Pendant 6W/9W 2700K Dimmable, black
8203431	ORBIT Wall light 6W/9W 2700K Dimmable, black

BIG LENS OPTICS

8202440-10	ORBIT Big lens 10°
8202440-20	ORBIT Big lens 20°
8202440-36	ORBIT Big lens 36°
8202440-60	ORBIT Big lens 60°

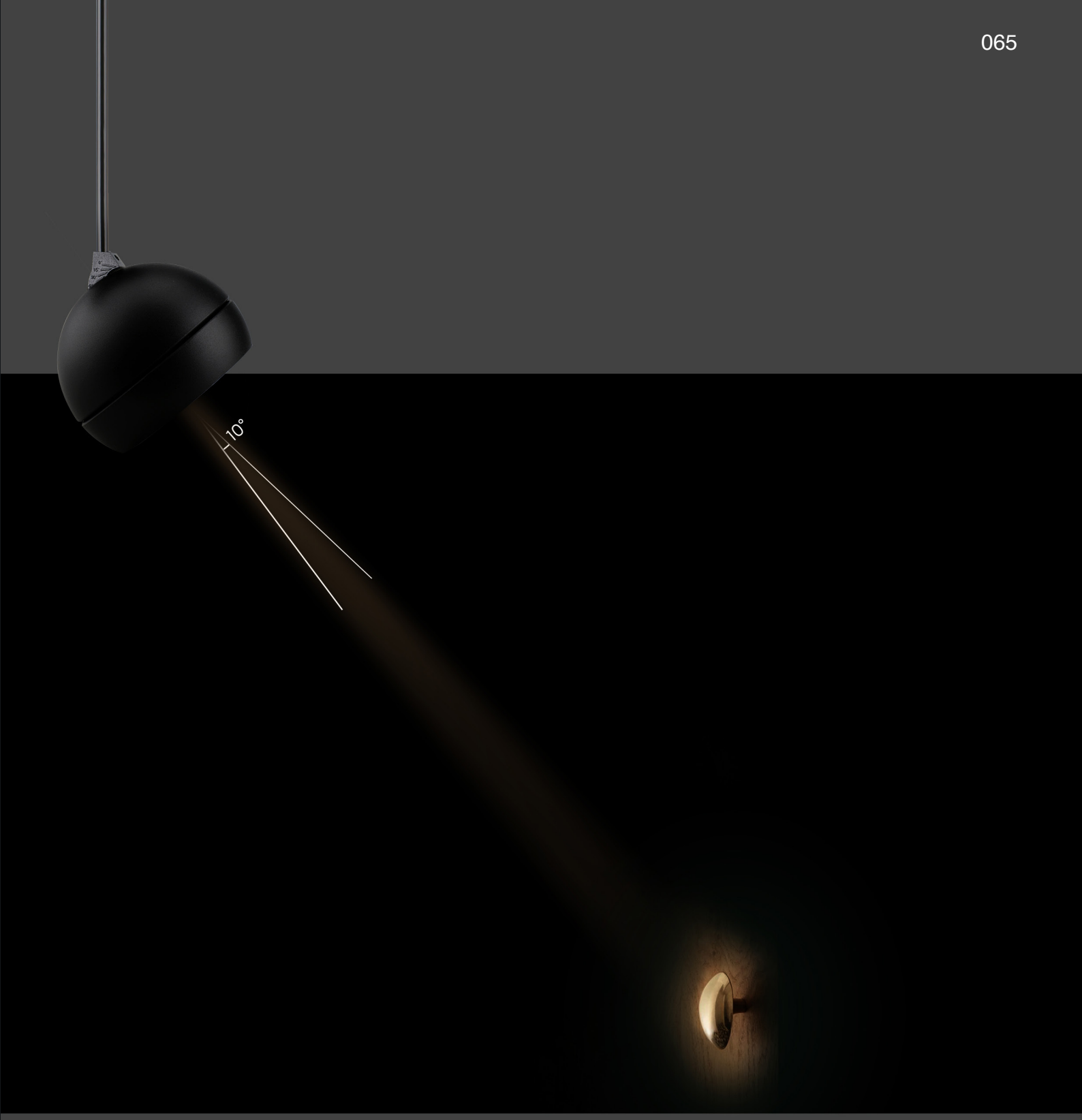

BIG LENS

The BIG LENS features a large and flat optic, it is a three-quarters spherical accessory with a minimum beam angle of 10°.

ORBIT

MINI LENS

The MINI LENS is a spherical accessory with a mini recessed anti-glare reflector.
Optics available in 18°, 30°, 42° and 55°

ORBIT BASE

TR0143B	ORBIT Trackspot 6W/9W 2700K Dimmable, black
TR0144B	ORBIT Track pendant 6W/9W 2700K Dimmable, black
8203430	ORBIT Pendant 6W/9W 2700K Dimmable, black
8203431	ORBIT Wall light 6W/9W 2700K Dimmable, black

MINI LENS OPTICS

8202441-18	ORBIT Mini lens 18°
8202441-30	ORBIT Mini lens 30°
8202441-42	ORBIT Mini lens 42°
8202441-55	ORBIT Mini lens 55°

MINI LENS INSERTS

8202441-G	ORBIT Mini lens insert Gold
8202441-W	ORBIT Mini lens insert White
8202441-B	ORBIT Mini lens insert Black
8202441-C	ORBIT Mini lens insert Specular

MINI LENS

The MINI LENS is a spherical accessory with a mini recessed anti-glare reflector.

ORBIT

FLOOD LENS

The FLOOD LENS is a spherical accessory providing ambient lighting and flood lighting with a milky white diffuser optic (150°).

ORBIT BASE

TR0143B	ORBIT Trackspot 6W/9W 2700K Dimmable, black
TR0144B	ORBIT Track pendant 6W/9W 2700K Dimmable, black
8203430	ORBIT Pendant 6W/9W 2700K Dimmable, black
8203431	ORBIT Wall light 6W/9W 2700K Dimmable, black

FLOOD LENS OPTIC

8202442	ORBIT Flood lens 150° White

The FLOOD LENS is a spherical accessory providing ambient lighting and flood lighting with a milky white diffuser optic.

FLOOD LENS

ORBIT

DECORATIVE LENS

The DECORATIVE LENS is a spherical accessory featuring a flat cilinder optic with anti-glare, and a decorative reflector.
Optics available in 15°, 24°, 36° and 60°

ORBIT BASE

TR0143B	ORBIT Trackspot 6W/9W 2700K Dimmable, black
TR0144B	ORBIT Track pendant 6W/9W 2700K Dimmable, black
8203430	ORBIT Pendant 6W/9W 2700K Dimmable, black
8203431	ORBIT Wall light 6W/9W 2700K Dimmable, black

DECORATIVE LENS OPTICS

8202443-15	ORBIT Decorative lens 15°
8202443-24	ORBIT Decorative lens 24°
8202443-36	ORBIT Decorative lens 36°
8202443-60	ORBIT Decorative lens 60°

DECORATIVE LENS INSERTS

8202443-G	ORBIT Decorative lens insert Gold
8202443-W	ORBIT Decorative lens insert White
8202443-B	ORBIT Decorative lens insert Black
8202443-C	ORBIT Decorative lens insert Specular

DECORATIVE LENS

The DECORATIVE LENS is a spherical accessory featuring a flat cilinder optic with anti-glare, and a decorative reflector.

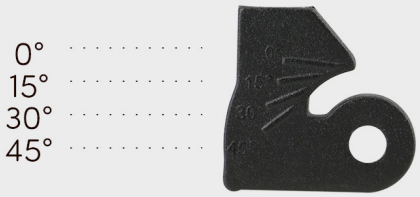

The spot has a maximum 45° tilt

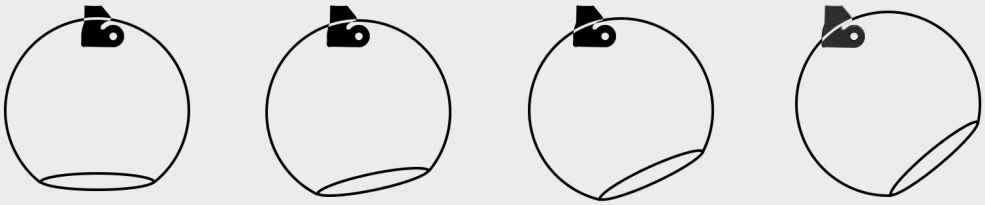

Interchangeable modules and optics are easy to install using the F-Connect system.

1. Connect the safety cable
2. Rotate the module, wait for the click to secure it in place.

The precise tilt angle can be confirmed through the clock-ticking sound.

ORBIT

TR0143B ORBIT Trackspot 6W/9W 2700K Dimmable, black

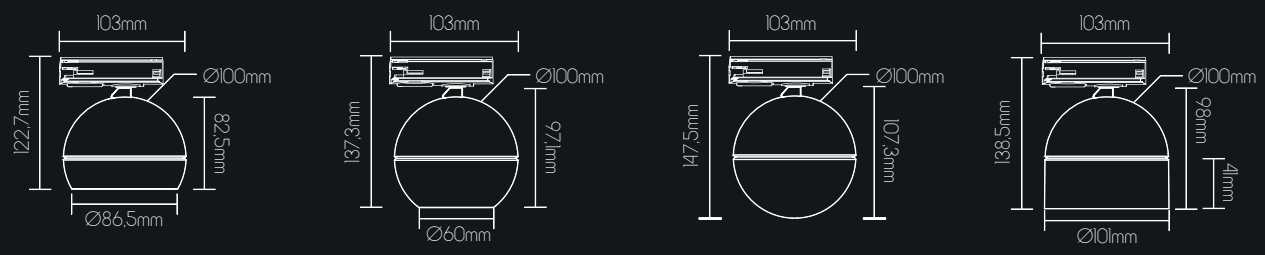

TR0144B ORBIT Track pendant 6W/9W 2700K Dimmable, black

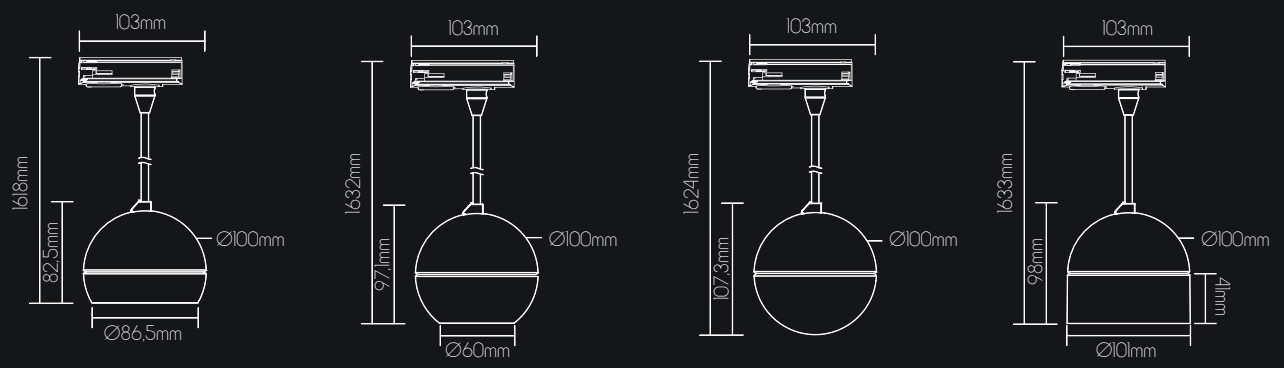

8203430 ORBIT Pendant 6W/9W 2700K Dimmable, black

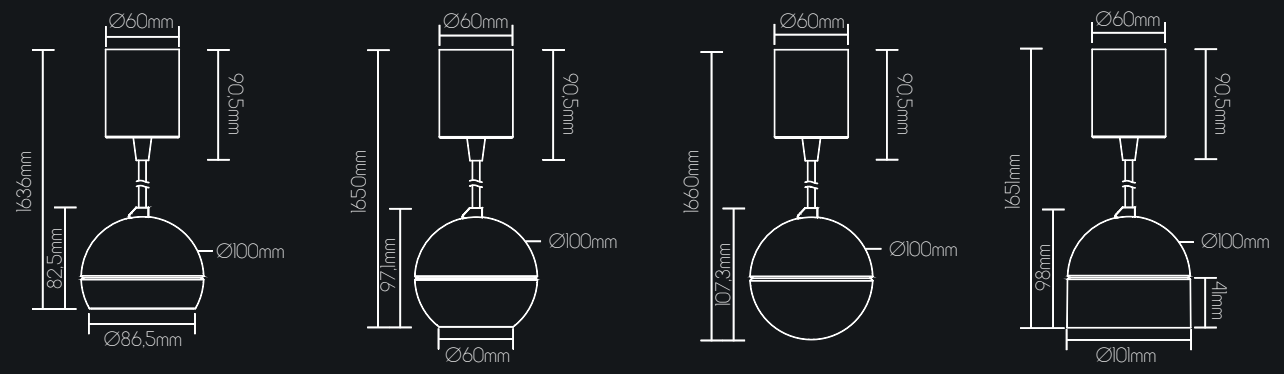

8203431 ORBIT Wall light 6W/9W 2700K Dimmable, black

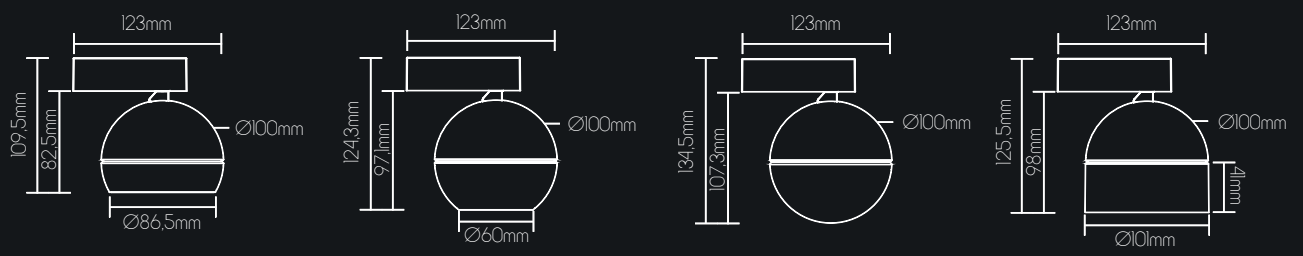

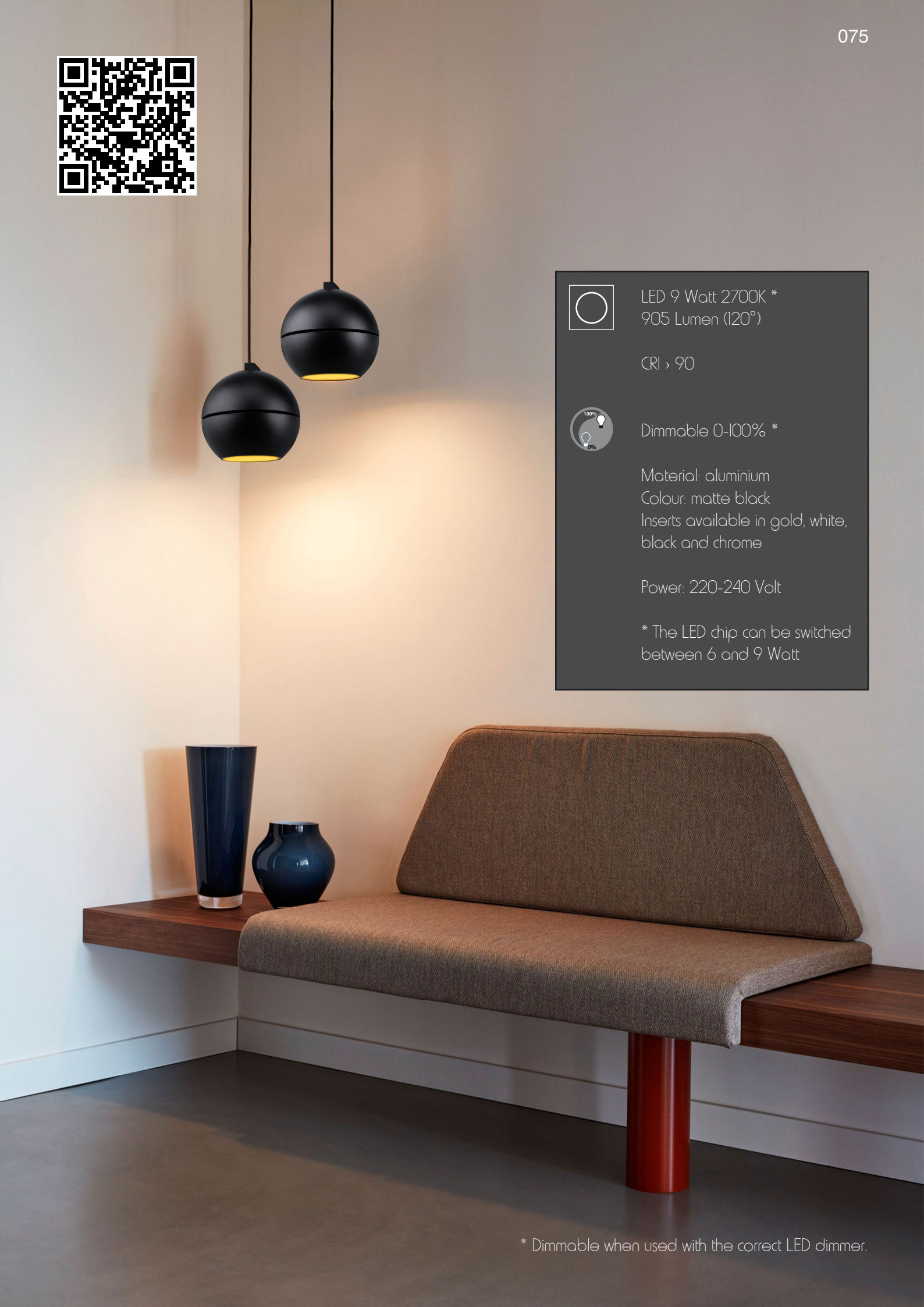

LED 9 Watt 2700K *
905 Lumen (120°)

CRI › 90

Dimmable 0-100% *

Material: aluminium
Colour: matte black
Inserts available in gold, white, black and chrome

Power: 220-240 Volt

* The LED chip can be switched between 6 and 9 Watt

* Dimmable when used with the correct LED dimmer.

PURE

- Super slim, light tapered design
- Thinnest profile on the market
- Less than 6 mm wide at the top
- Same thin profile for all pendants and floorlamps
- Dimmable *

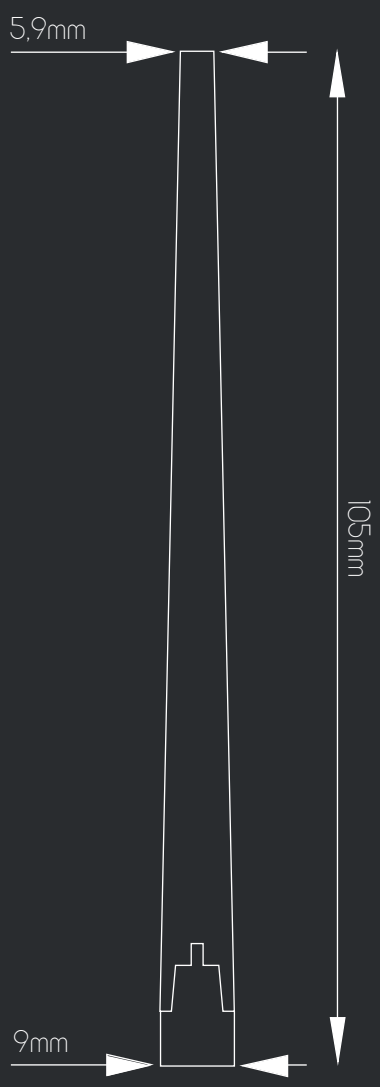

* Dimmable when used with the correct LED dimmer.

PURE

- Design LED lighting
- Dimmable
- Warm white light
- Available in three colours: matte black, matte white and dark copper brown
- Different models available: square, round and long straight pendants, floor lamps and wall lights

Wall light - up and down light:

3300678 PURE 11 Watt LED 770 Lumen, 3000K, dimmable, matte white
3300679 PURE 11 Watt LED 770 Lumen, 3000K, dimmable, matte black
3300680 PURE 11 Watt LED 770 Lumen, 3000K, dimmable, dark copper brown

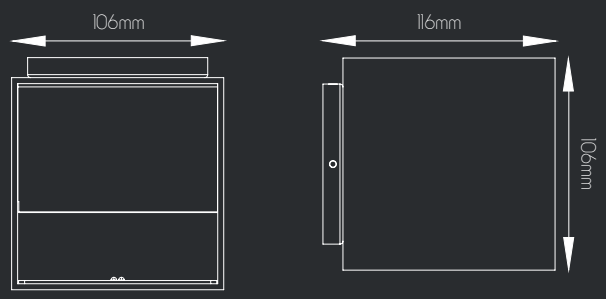

COB LED
11 Watt 770 Lumen 3000K

Dimmable 0-100% *

Dimmable driver included

Material: aluminium

Colour: dark copper brown, matte white, matte black

Power: 220-240 Volt

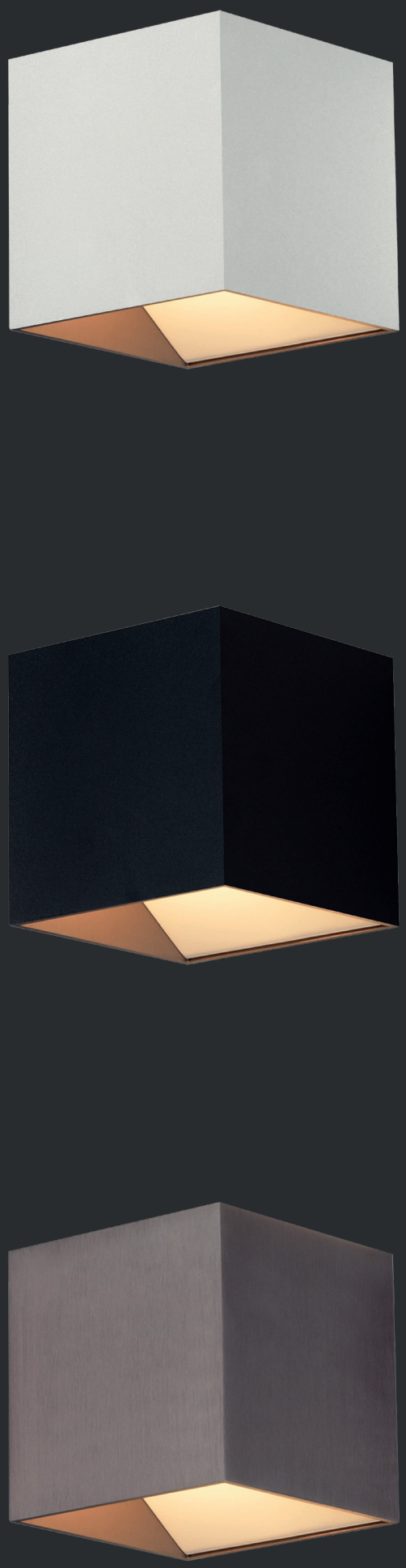

PURE

- Design LED lighting
- Dimmable
- Warm white light
- Available in three colours: matte black, matte white and dark copper brown
- Different models available: square, round and long straight pendants, floor lamps and wall lights

Circular pendant Ø60cm:

3300686 PURE 22 Watt LED 1540 Lumen, 3000K, dimmable, dark copper brown
3300696 PURE 22 Watt LED 1540 Lumen, 3000K, dimmable, matte white
3300706 PURE 22 Watt LED 1540 Lumen, 3000K, dimmable, matte black

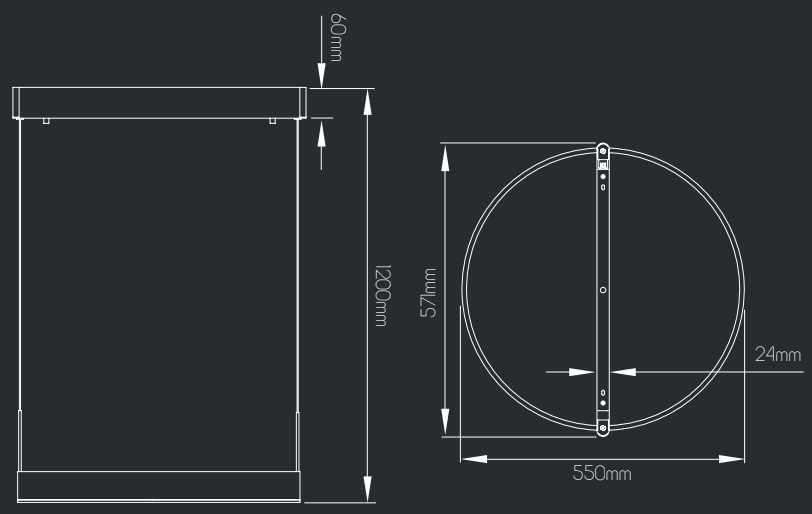

SMD LED
22 Watt 1540 Lumen 3000K

Dimmable 0-100% *

Dimmable driver included

Material: aluminium

Colour: dark copper brown, matte white, matte black

Power: 220-240 Volt

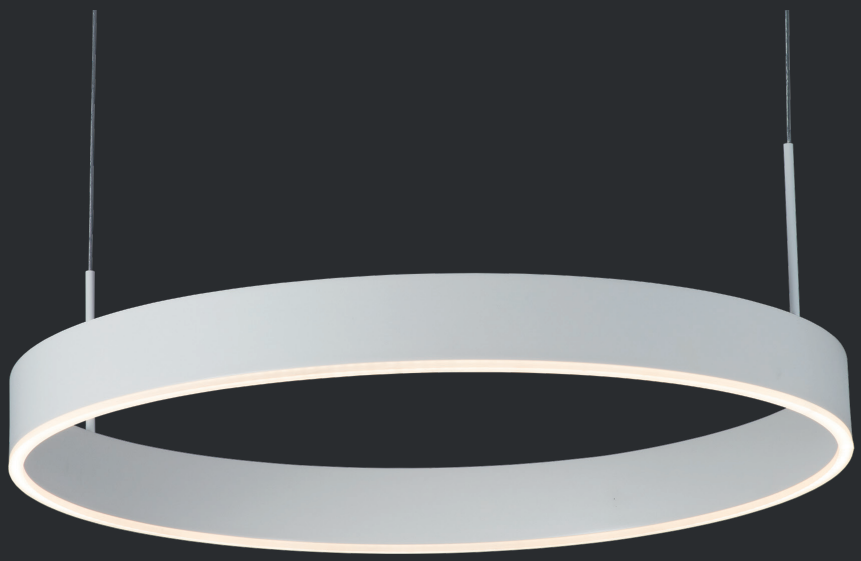

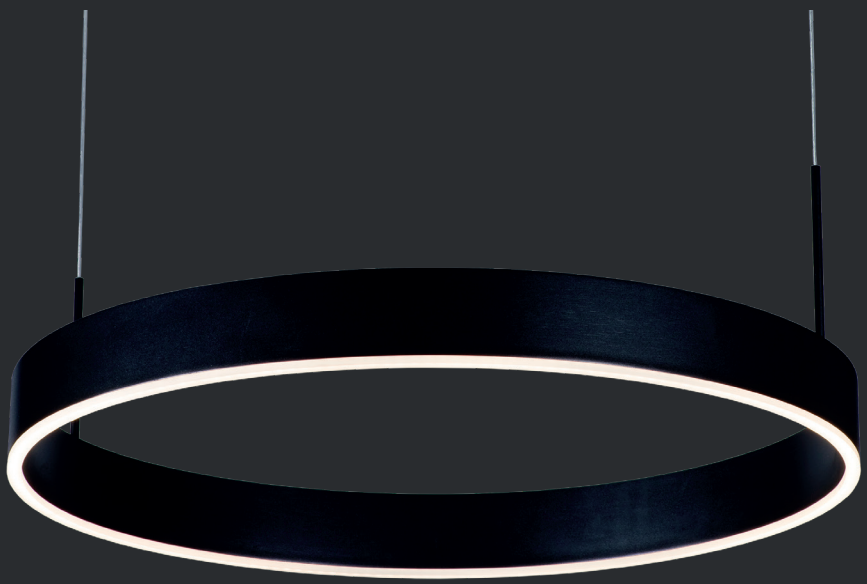

PURE

- Design LED lighting
- Dimmable
- Warm white light
- Available in three colours: matte black, matte white and dark copper brown
- Different models available: square, round and long straight pendants, floor lamps and wall lights

Circular pendant Ø90cm:

3300687	PURE 35 Watt LED 2100 Lumen, 3000K, dimmable, dark copper brown
3300697	PURE 35 Watt LED 2100 Lumen, 3000K, dimmable, matte white
3300707	PURE 35 Watt LED 2100 Lumen, 3000K, dimmable, matte black

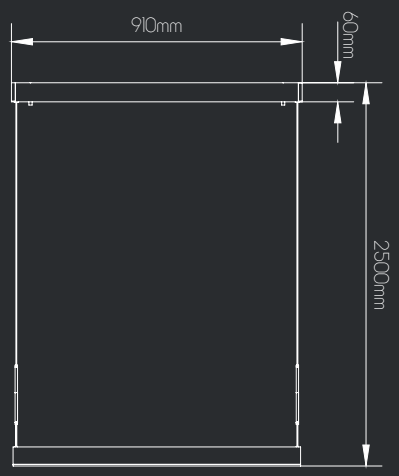

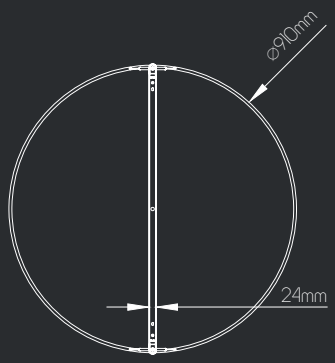

SMD LED
35 Watt 2100 Lumen 3000K

Dimmable 0-100% *

Dimmable driver included

Material: aluminium

Colour: dark copper brown, matte white, matte black

Power: 220-240 Volt

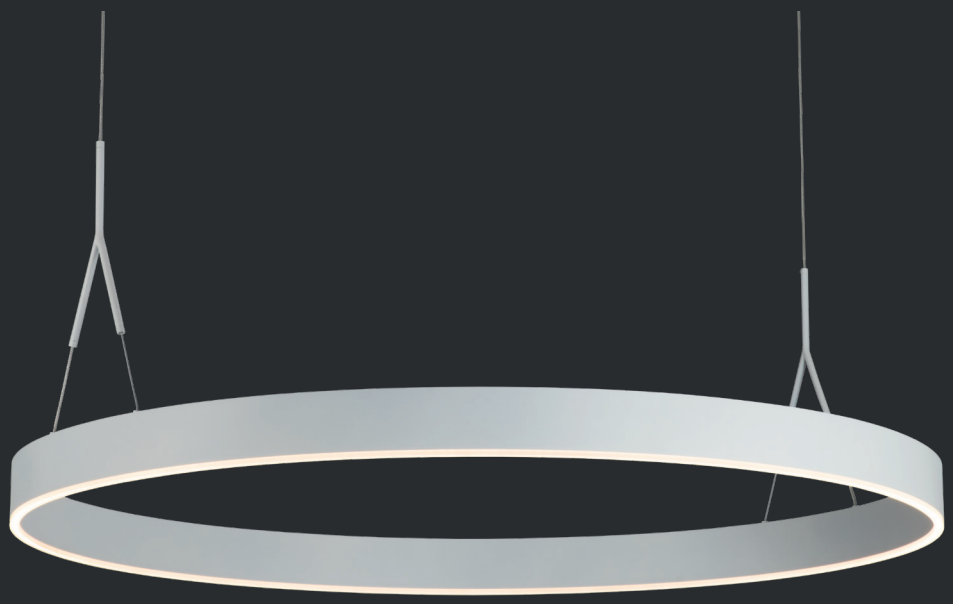

PURE

- Design LED lighting
- Dimmable
- Warm white light
- Available in three colours: matte black, matte white and dark copper brown
- Different models available: square, round and long straight pendants, floor lamps and wall lights

Square pendant 60cm:

3300689	PURE 31 Watt LED 2170 Lumen, 3000K, dimmable, dark copper brown
3300699	PURE 31 Watt LED 2170 Lumen, 3000K, dimmable, matte white
3300709	PURE 31 Watt LED 2170 Lumen, 3000K, dimmable, matte black

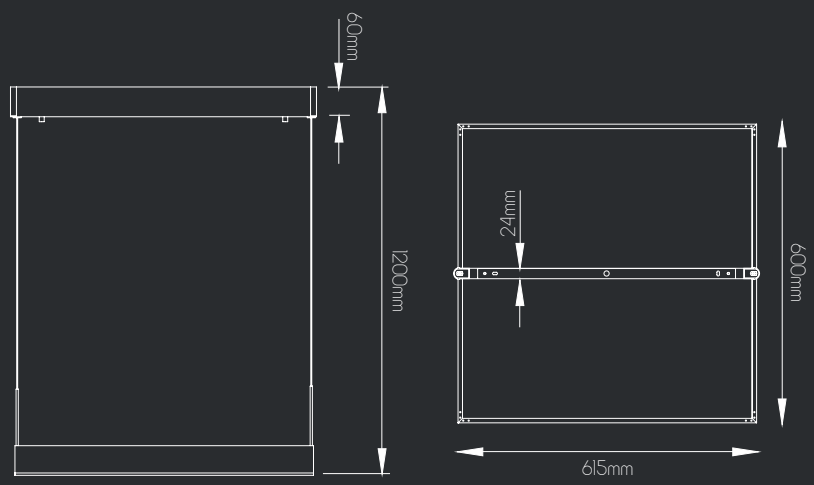

SMD LED
31 Watt 2170 Lumen 3000K

Dimmable 0-100% *

Dimmable driver included

Material: aluminium

Colour: dark copper brown, matte white, matte black

Power: 220-240 Volt

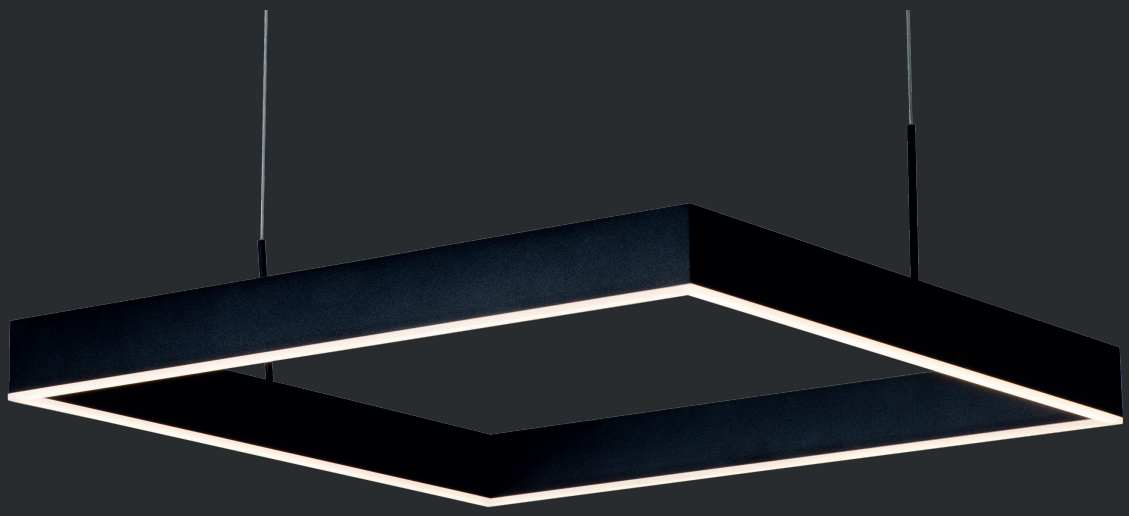

PURE

- Design LED lighting
- Dimmable
- Warm white light
- Available in three colours: matte black, matte white and dark copper brown
- Different models available: square, round and long straight pendants, floor lamps and wall lights

Square pendant 90cm:

3300690 PURE 42 Watt LED 2520 Lumen, 3000K, dimmable, dark copper brown
3300700 PURE 42 Watt LED 2520 Lumen, 3000K, dimmable, matte white
3300710 PURE 42 Watt LED 2520 Lumen, 3000K, dimmable, matte black

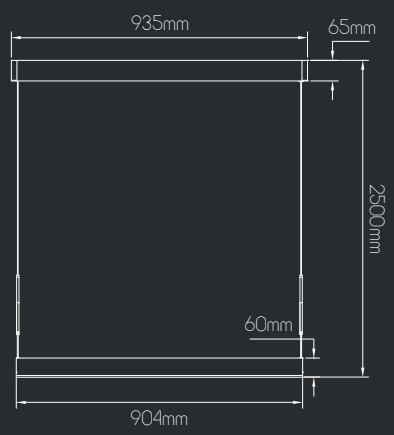

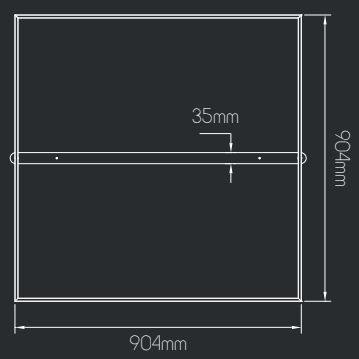

SMD LED
42 Watt 2520 Lumen 3000K

Dimmable 0-100% *

Dimmable driver included

Material: aluminium

Colour: dark copper brown, matte white, matte black

Power: 220-240 Volt

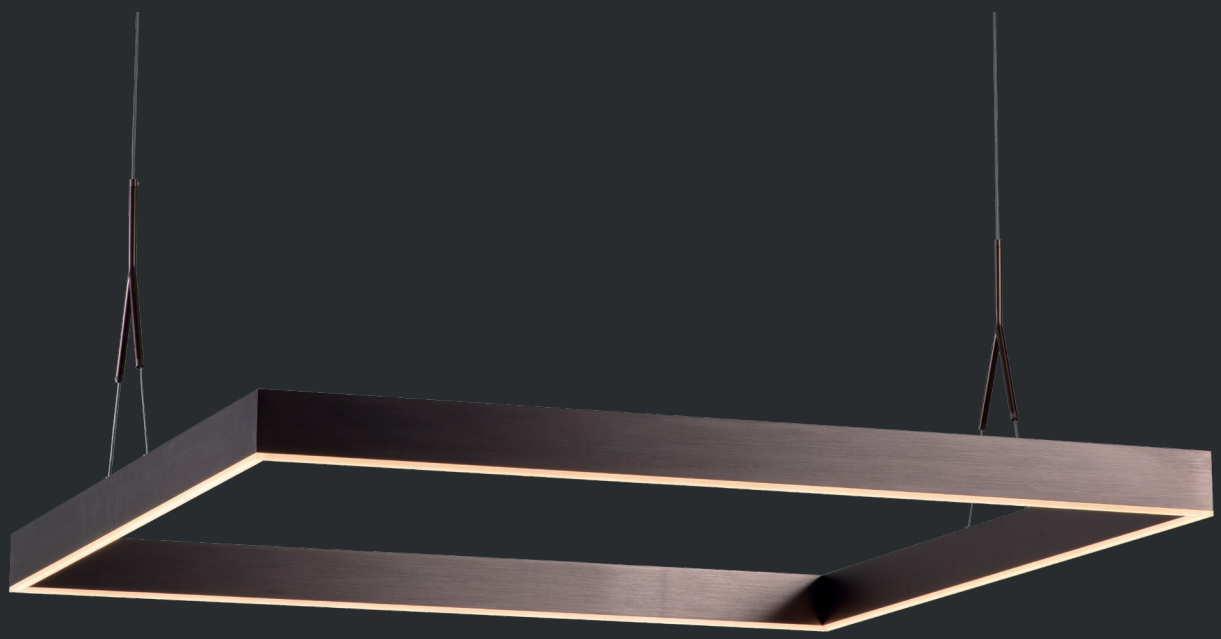

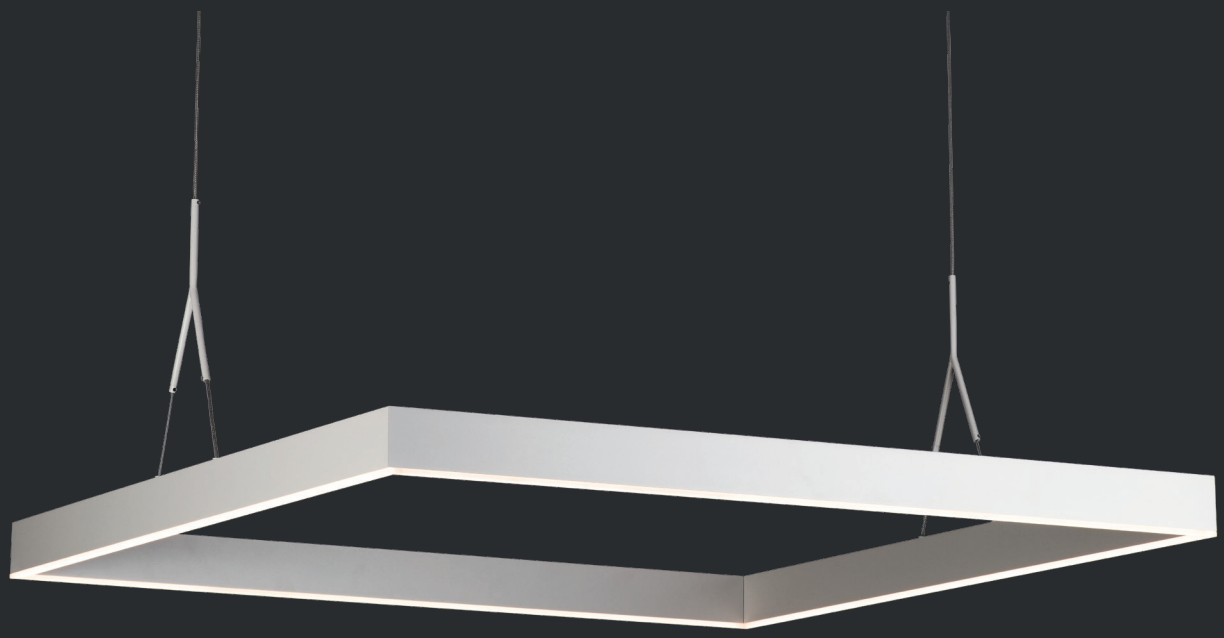

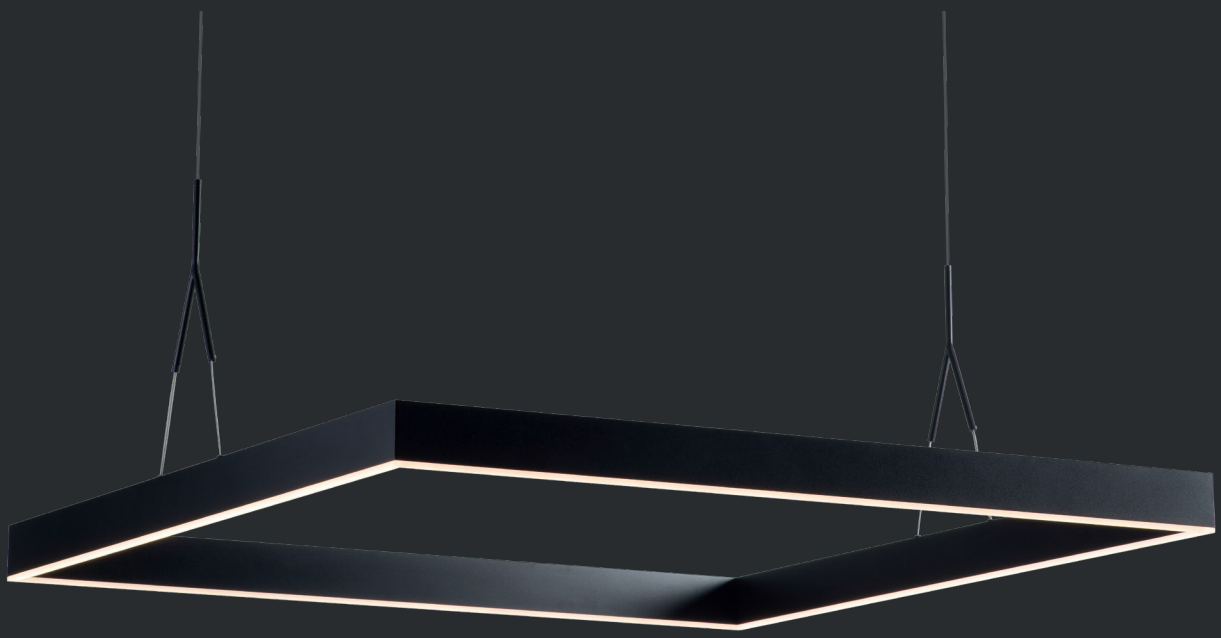

PURE

- Design LED lighting
- Dimmable
- Warm white light
- Available in three colours: matte black, matte white and dark copper brown
- Different models available: square, round and long straight pendants, floor lamps and wall lights

Pendant 120cm:

3300683 PURE 26 Watt LED 1820 Lumen, 3000K, dimmable, dark copper brown
3300693 PURE 26 Watt LED 1820 Lumen, 3000K, dimmable, matte white
3300703 PURE 26 Watt LED 1820 Lumen, 3000K, dimmable, matte black

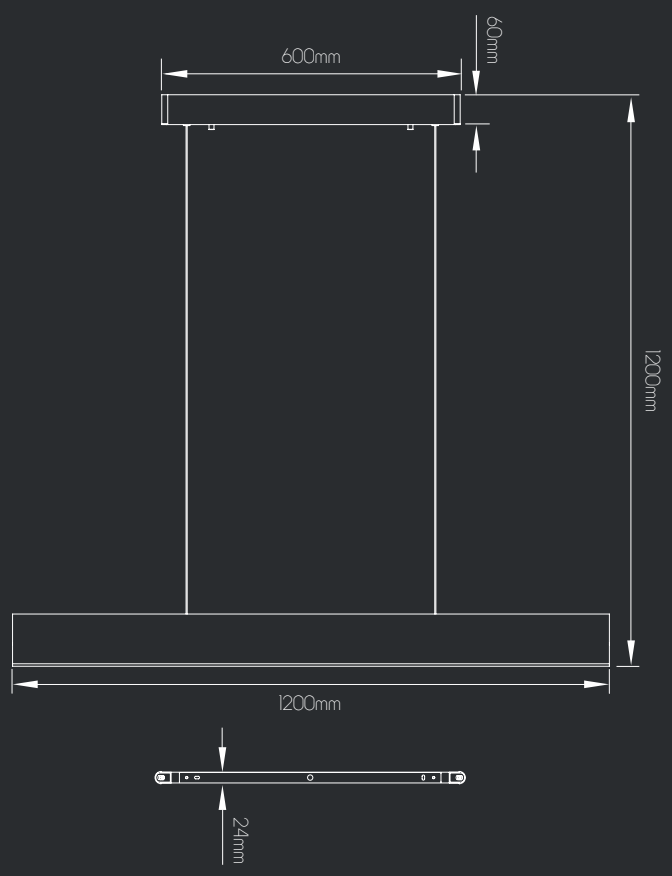

SMD LED
26 Watt 1820 Lumen 3000K

Dimmable 0-100% *

Dimmable driver included

Material: aluminium

Colour: dark copper brown, matte white, matte black

Power: 220-240 Volt

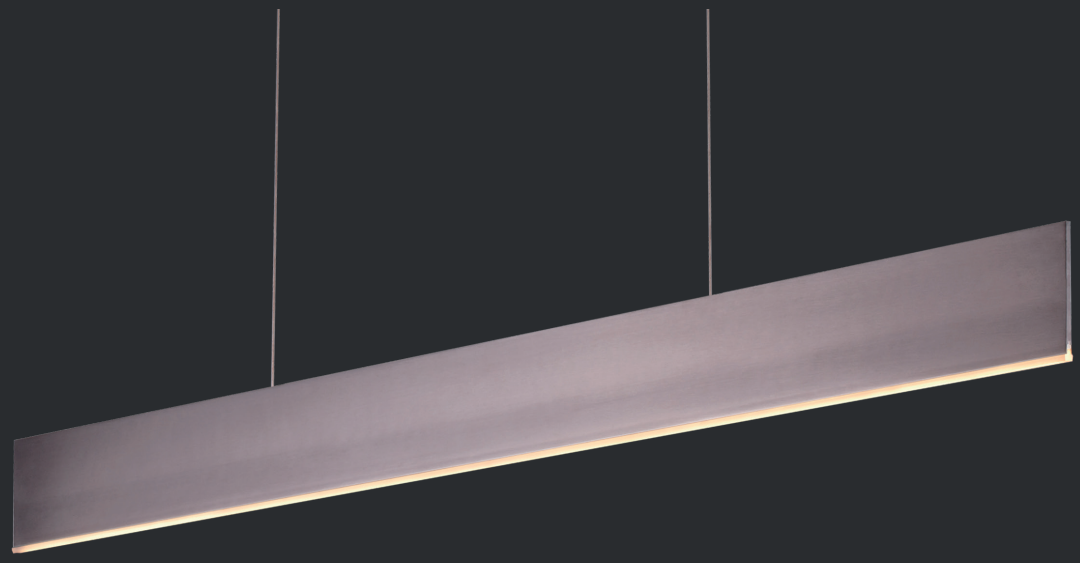

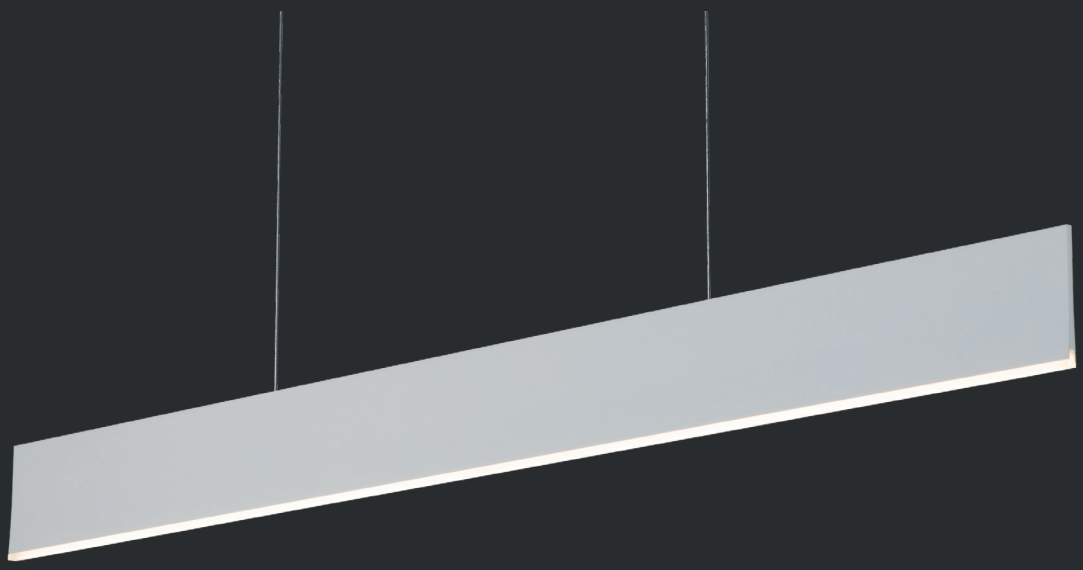

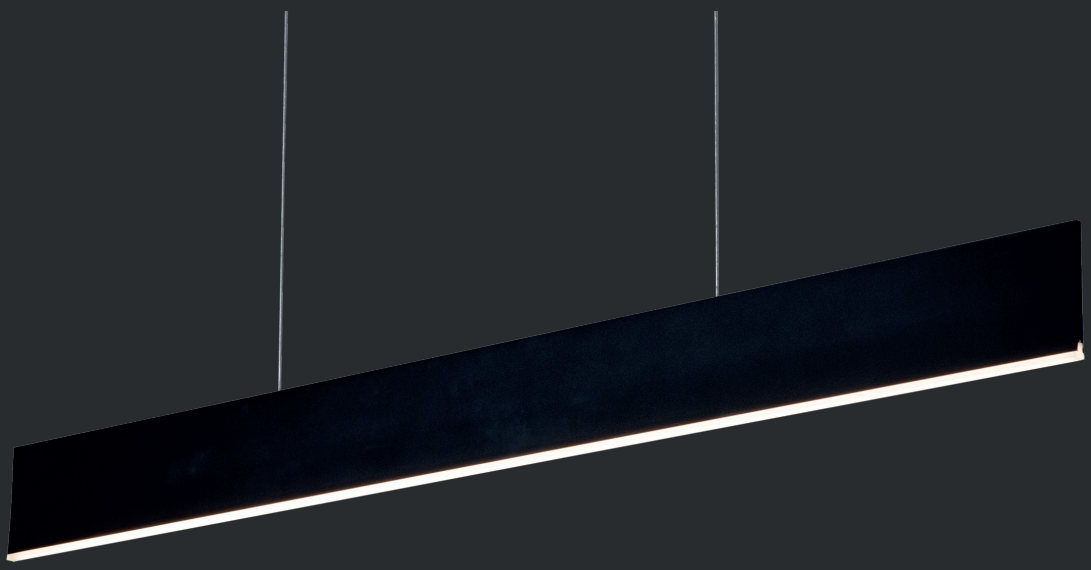

PURE

- Design LED lighting
- Dimmable
- Warm white light
- Available in two colours: matte black and matte white
- Different models available: square, round and long straight pendants, floor lamps and wall lights

Pendant 180cm:

3300694 PURE 37 Watt LED 2590 Lumen, 3000K, dimmable, matte white
3300704 PURE 37 Watt LED 2590 Lumen, 3000K, dimmable, matte black

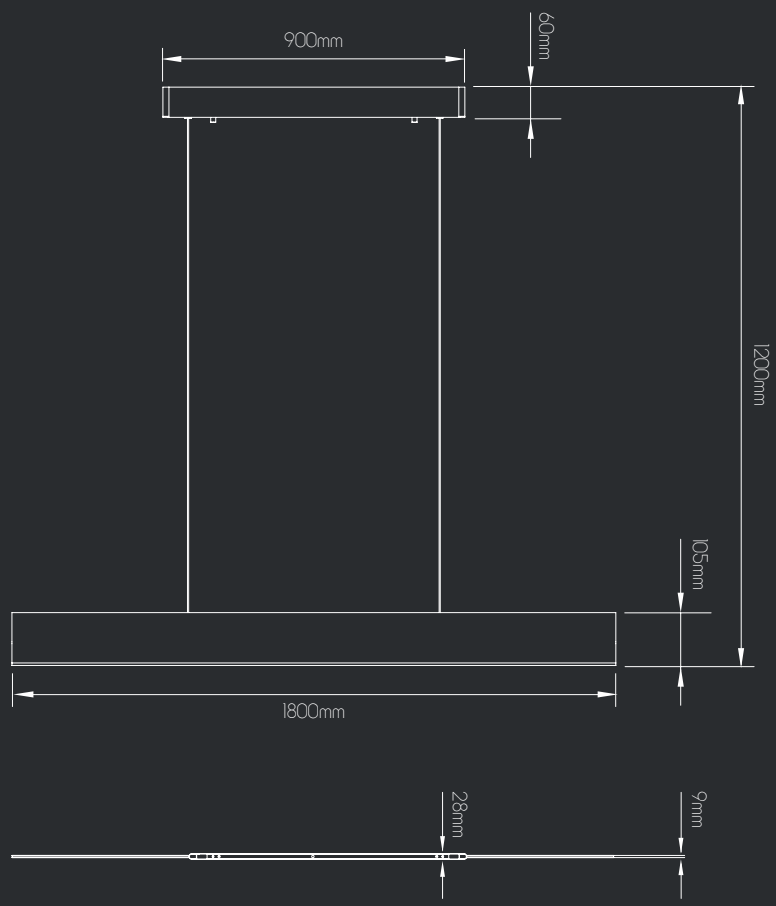

SMD LED
37 Watt 2590 Lumen 3000K

Dimmable 0-100% *

Dimmable driver included

Material: aluminium

Colour: matte white, matte black

Power: 220-240 Volt

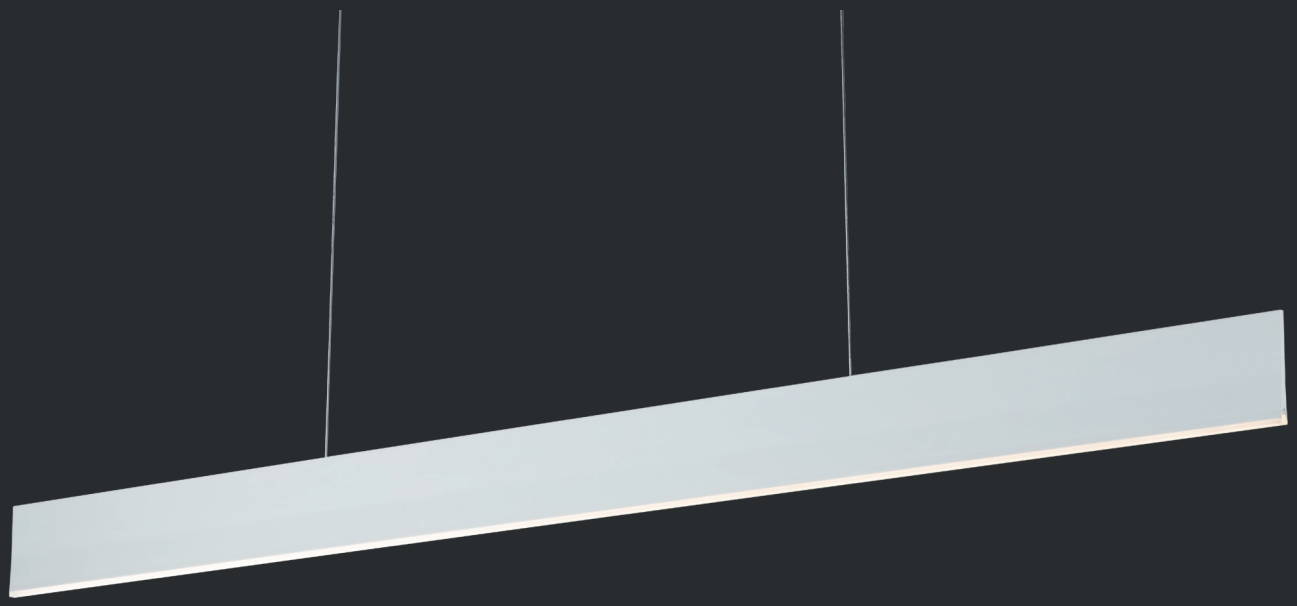

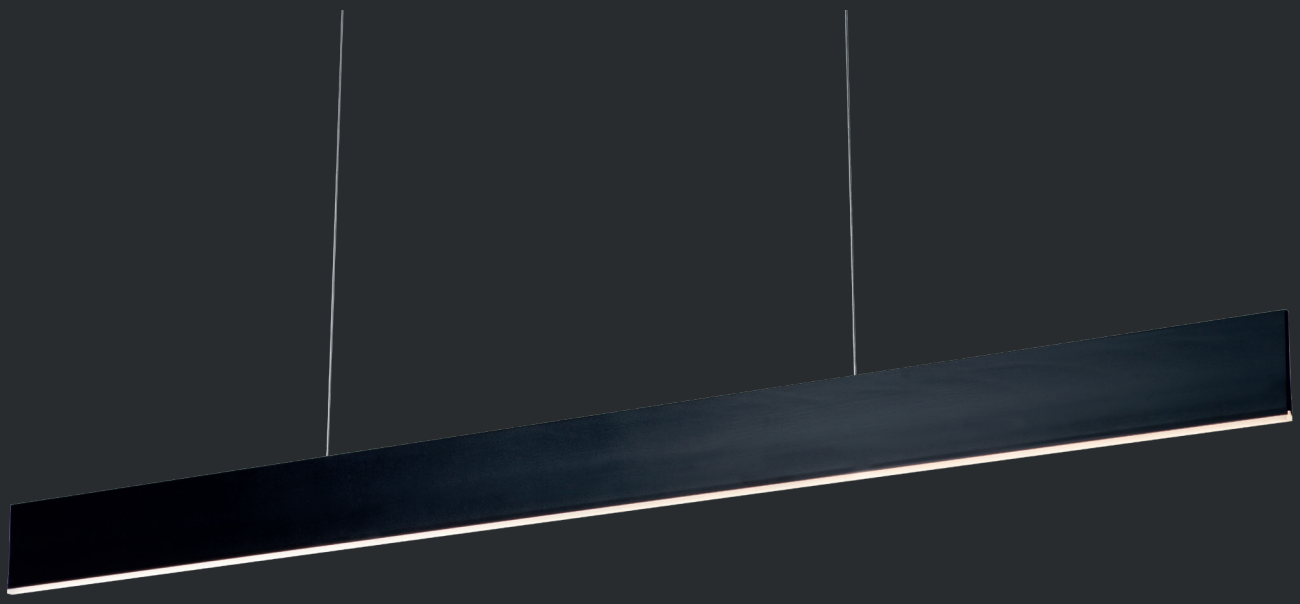

PURE

- Design LED lighting
- Dimmable on request
- Warm white light
- Available in two colours: matte black and matte white
- Different models available: square, round and long straight pendants, floor lamps and wall lights

Pendant 250cm:

3300695 PURE 42 Watt LED 2940 Lumen, 3000K, dimmable, matte white
3300705 PURE 42 Watt LED 2940 Lumen, 3000K, dimmable, matte black

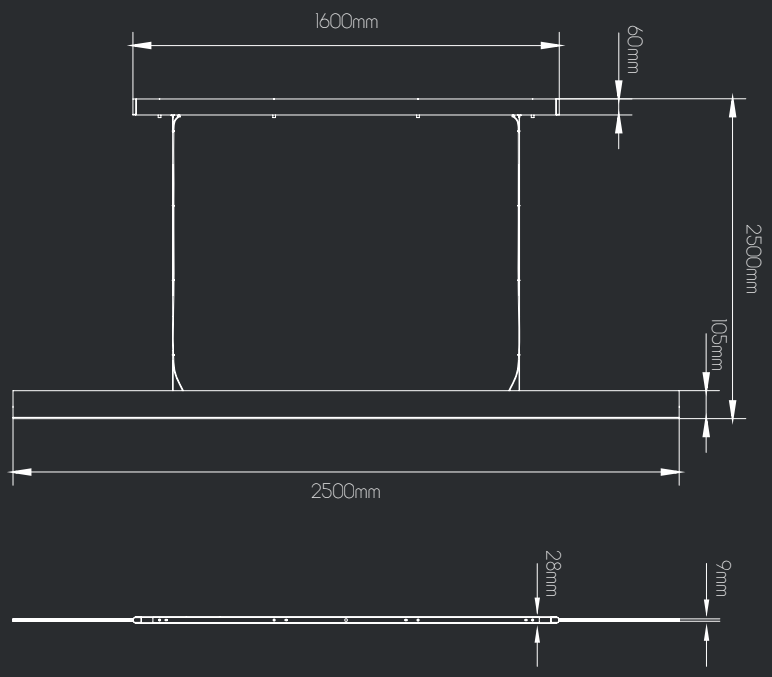

SMD LED
42 Watt 2940 Lumen 3000K

Dimmable 0-100% *

Driver included
(dimmable driver on request)

Material: aluminium

Colour: matte white, matte black

Power: 220-240 Volt

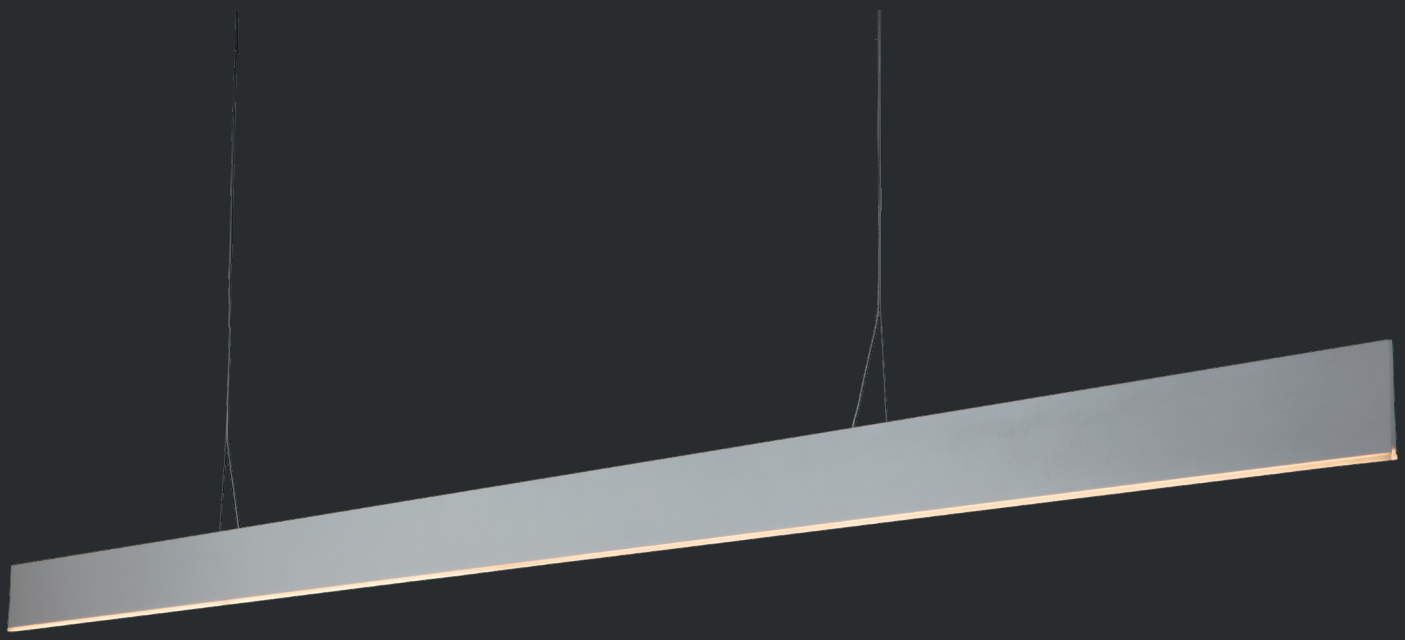

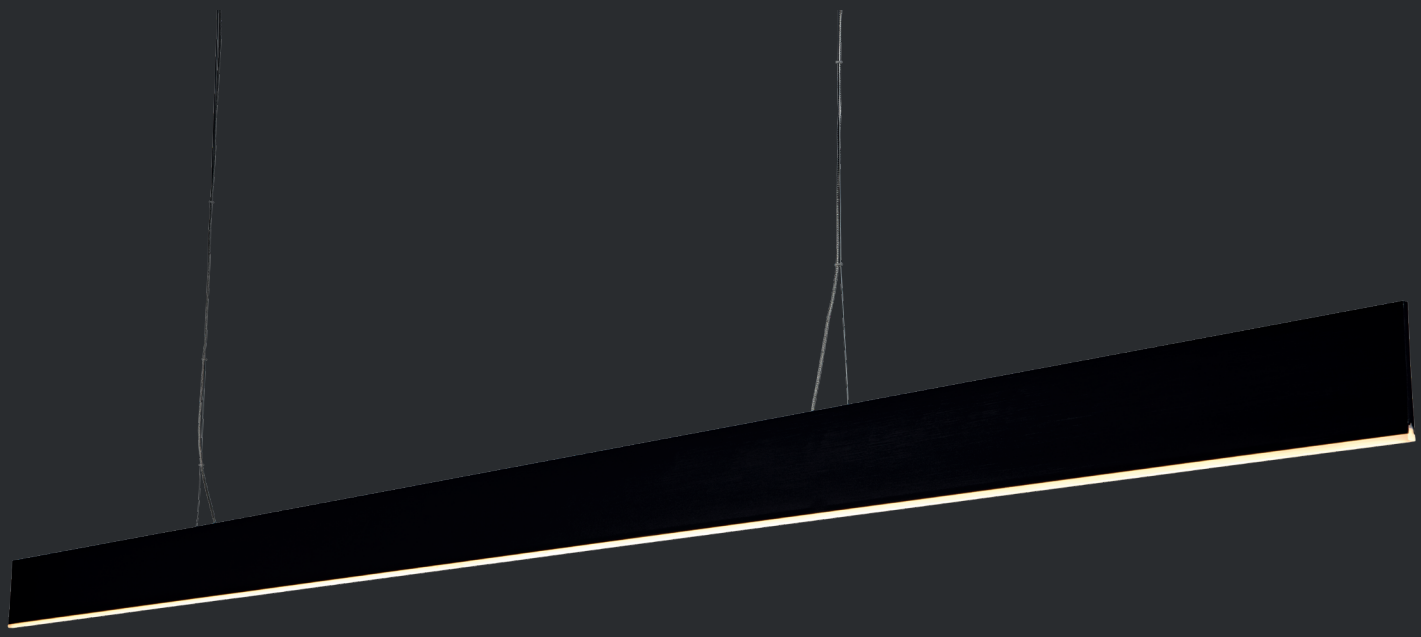

PURE

- Design LED lighting
- Warm white light
- Available in three colours: matte black, matte white and dark copper brown
- Different models available: square, round and long straight pendants, floor lamps and wall lights

Floorlamp 150cm:

3300682 PURE 23 Watt LED 1610 Lumen, 3000K, dark copper brown
3300692 PURE 23 Watt LED 1610 Lumen, 3000K, matte white
3300702 PURE 23 Watt LED 1610 Lumen, 3000K, matte black

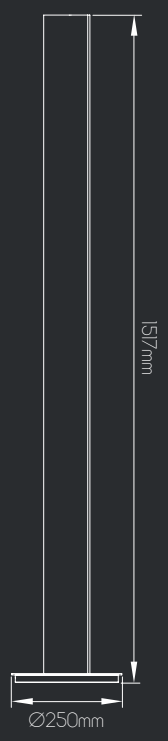

SMD LED
23 Watt 1610 Lumen 3000K

Not dimmable

Driver included

Material: aluminium

Colour: dark copper brown, matte white, matte black

Power: 220-240 Volt

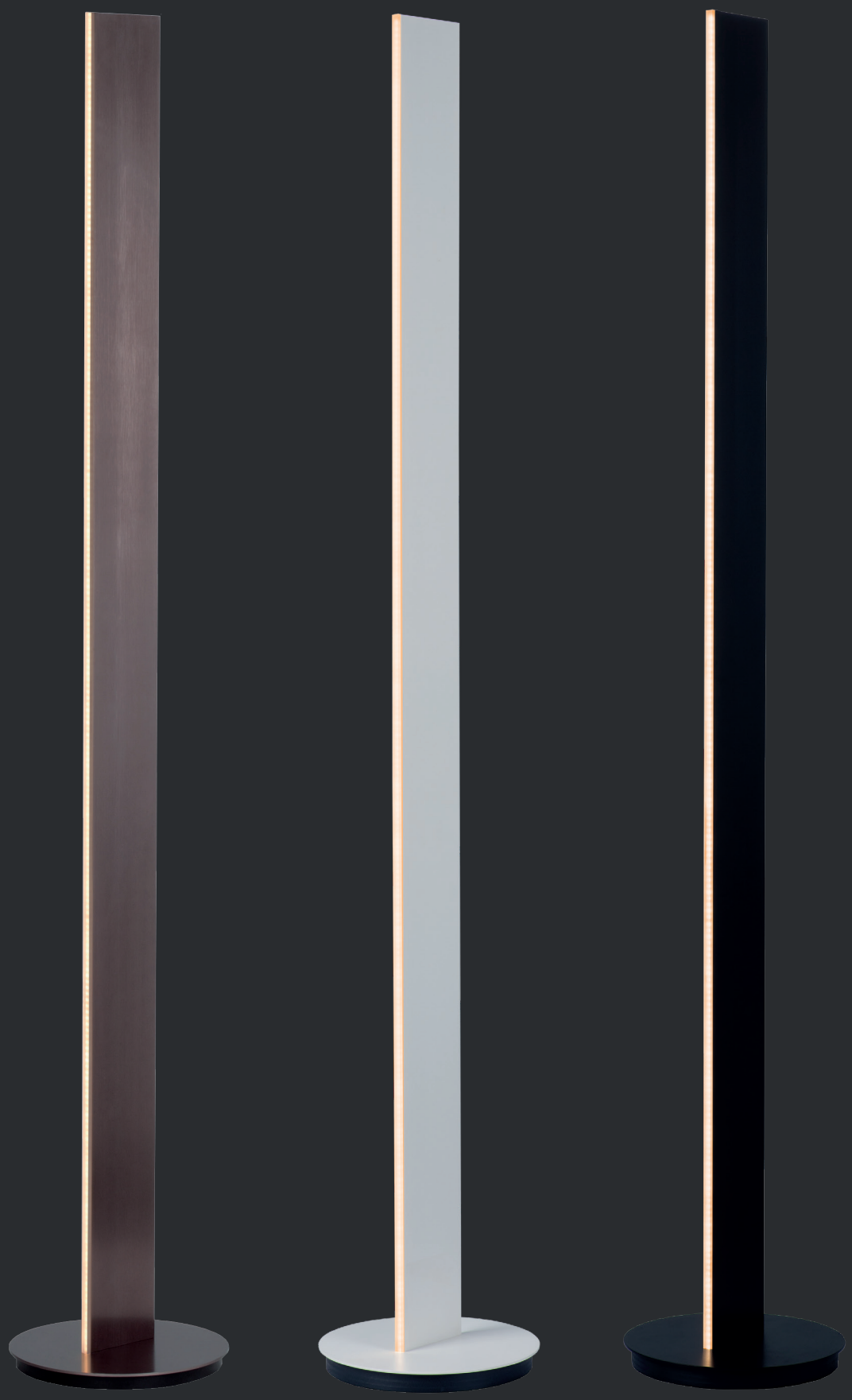

PURE

- Design LED lighting
- Dimmable
- Warm white light
- Available in two colours: matte black and matte white
- Different models available: square, round and long straight pendants, floor lamps and wall lights

Floorlamp 180cm:

3300691 PURE 32 Watt LED 2200 Lumen, 3000K, dimmable, matte white
3300701 PURE 32 Watt LED 2200 Lumen, 3000K, dimmable, matte black

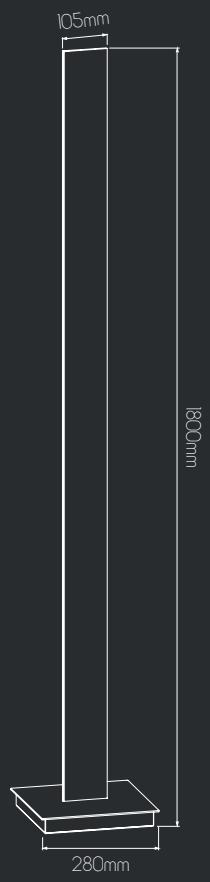

SMD LED
32 Watt 2200 Lumen 3000K

Dimmable 0-100%
Dimmer included

Material: aluminium

Colour: matte white, matte black

Power: 220-240 Volt

TALU

- Modern wall light with powerful uplighter for indoor use
- Ultra slim design, only 21mm thick
- Includes a 20 Watt integrated AC LED chip

Available versions:

8202521 TALU 20 Watt LED Uplighter white
8202522 TALU 20 Watt LED Uplighter black

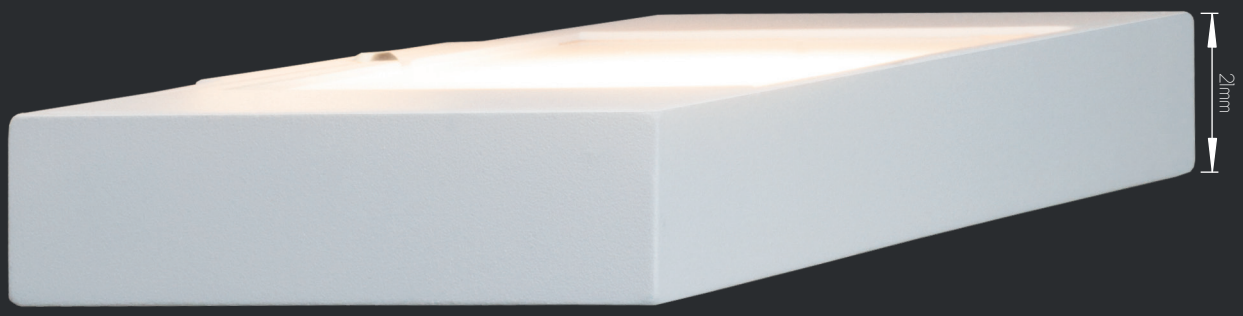

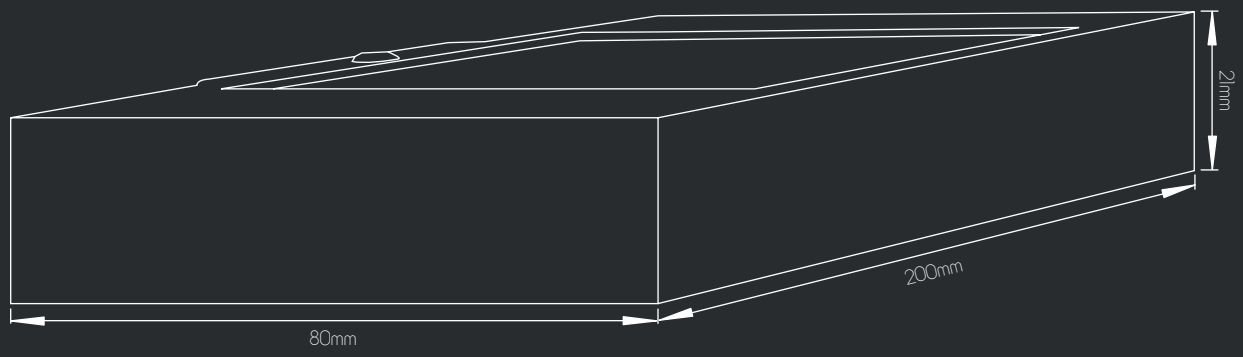

AC LED 20 Watt 1600 Lumen
2700K Warm White

Dimmable 0-100% *

Material: aluminium

Colour: matte white, matte black

Power: 220-240 Volt

* Dimmable when used with the correct LED dimmer.

XANDAR

- High-end modern monophase trackspot
- Professional quality COB LED included: CRI>90
- Change the lens, filter and insert.

Available versions:

TR0142B	XANDAR 10 Watt LED Trackspot matte black
TR0142W	XANDAR 10 Watt LED Trackspot matte white

XANDAR

COB LED 10 Watt 2700K
CRI›90
36°, 710 Lumen

Dimmable bulb 0-100% *

Dimmable driver included

Material: aluminium

Colour: matte white
matte black

Power: 220-240 Volt

Reflectors:
8202420: 15°
8202421: 60°

Inserts:
8202422: Gold

8202423: Honeycomb filter
(anti-glare)

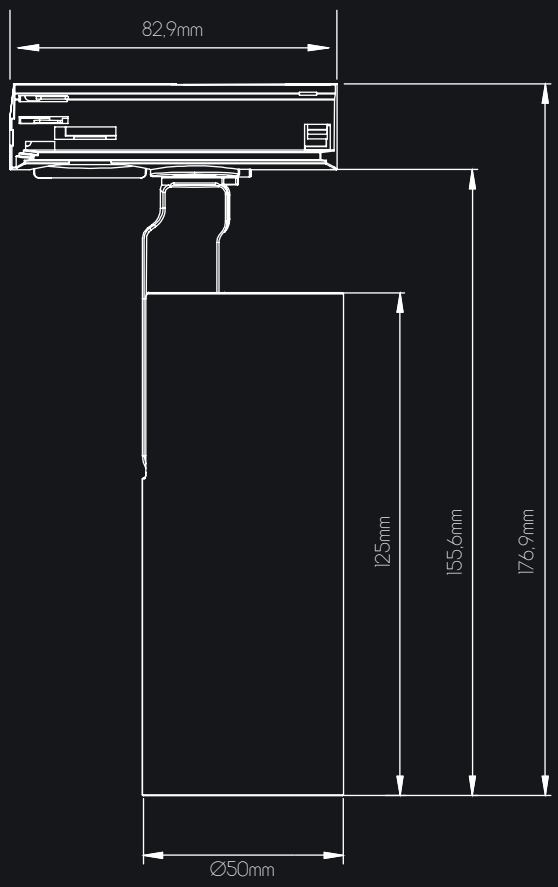

* Dimmable when used with the correct LED dimmer.

XOLO

- Modern LED pendant
- Available in matte white or matte black
- Available in 40cm and 50cm

Matte black version:

3432170	XOLO Pendant 40cm 7 Watt LED
3432175	XOLO Pendant 50cm 12 Watt LED

Matte white version:

3432171	XOLO Pendant 40cm 7 Watt LED
3432176	XOLO Pendant 50cm 12 Watt LED

XOLO

LED 7 Watt 580 Lumen
LED 12 Watt 990 Lumen
2700K Warm White

Dimmable 0-100% *

Dimmable driver included

Material: aluminium

Colour: matte white
matte black

Power: 220-240 Volt

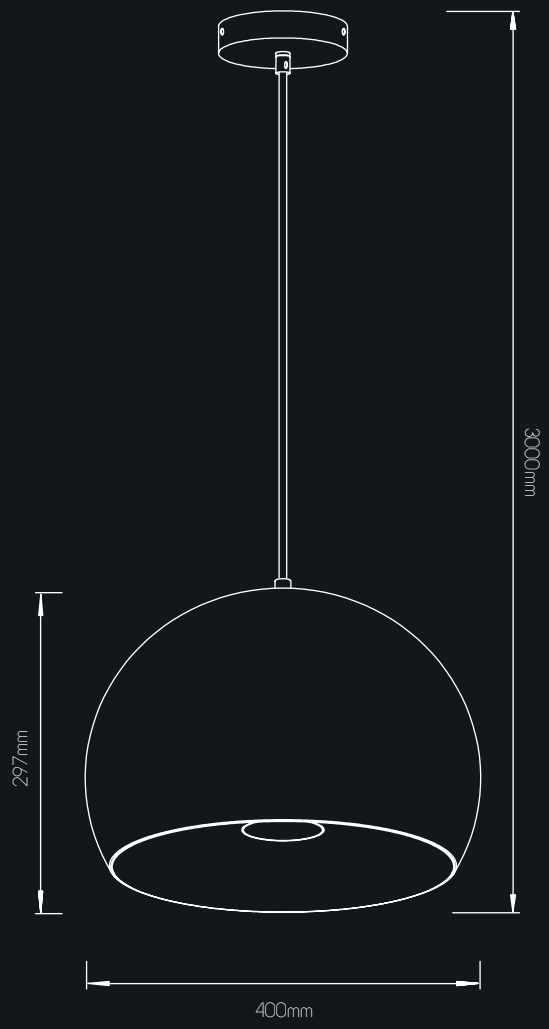

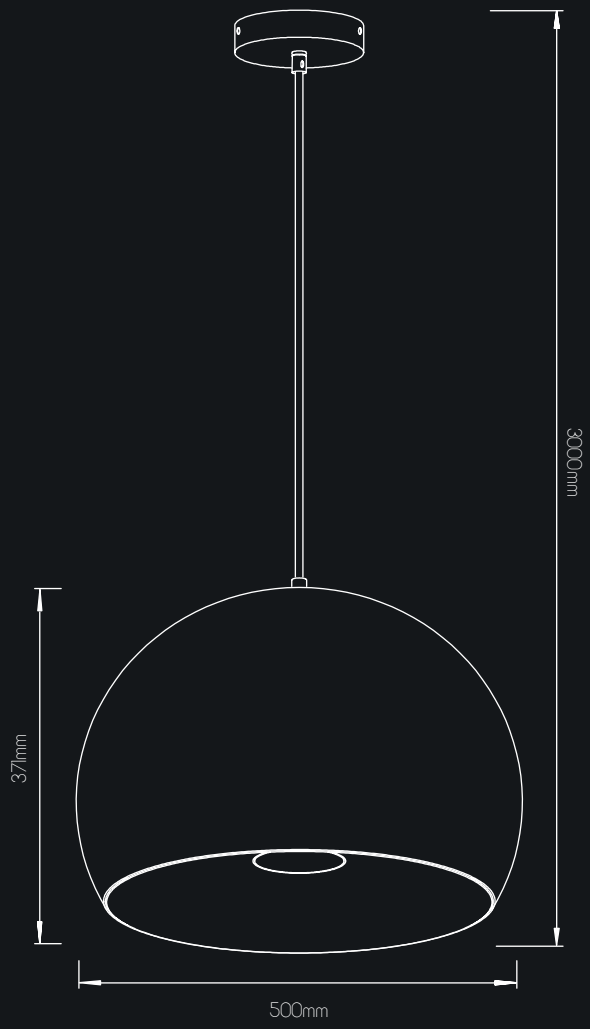

* Dimmable when used with the correct LED dimmer.

ZOLAN

- Unique tubular design spots
- Customizeable with different coloured Zoom inserts (black, white, dark copper brown, aluminium, gold)
- 3 different sizes
- Complete with dimmable replaceable LED spots
- Warm white light
- Available premade in matte black with gold insert and matte white with matte white insert

Matte white + matte white insert version:

4014150	ZOLAN 1 light, GU10 5 Watt LED included, height 110 mm
4014151	ZOLAN 1 light, GU10 5 Watt LED included, height 180 mm
4014152	ZOLAN 1 light, GU10 5 Watt LED included, height 250 mm

ZOLAN

- Unique tubular design spots
- Customizeable with different coloured Zoom inserts (black, white, dark copper brown, aluminium, gold)
- 3 different sizes
- Complete with dimmable replaceable LED spots
- Warm white light
- Available premade in matte black with gold insert and matte white with matte white insert

Matte black + gold insert version:

4014155	ZOLAN 1 light, GU10 5 Watt LED included, height 110 mm
4014156	ZOLAN 1 light, GU10 5 Watt LED included, height 180 mm
4014157	ZOLAN 1 light, GU10 5 Watt LED included, height 250 mm

ZOLAN

- Transform the Zolan spot into a pendant using the Zolan pendant kit.
- Extra long cable (3000mm) included
- Cable strain relief included
- Ready for use with monophase tracks and the INFINITUS profile, using a track adapter (TR0123)
- **Zolan spot not included!**

Pendant kit:

4014105 - Pendant kit, cable length max 3000mm, matte black canopy + black cable
4014106 - Pendant kit, cable length max 3000mm, matte white canopy + black cable

Installation guide:

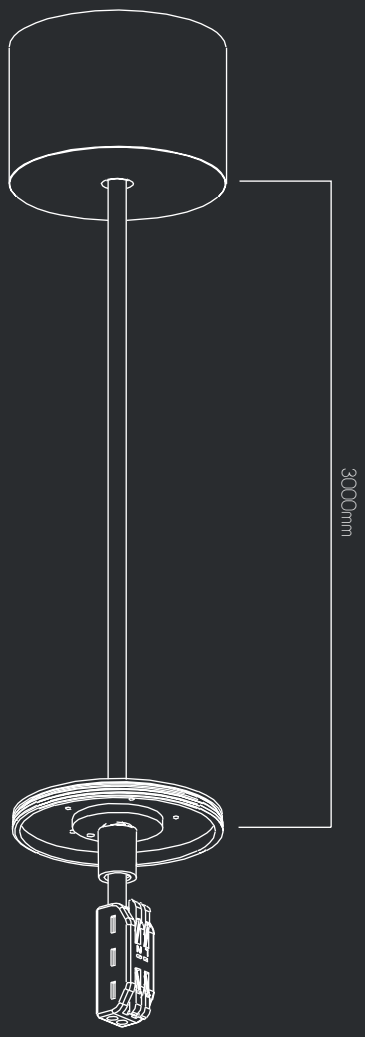

MAASAI
A TENT WITH A
POLAR

Zolan

Zolan / Zoom Inserts

ZOLAN

GU10 LED (8202652)
5 Watt 400 Lumen 2700K

Dimmable bulb 0-100% *

Material: aluminium

Colour: matte white + matte white insert
matte black + gold insert

Power: 220-240 Volt

Compatible with Zoom inserts

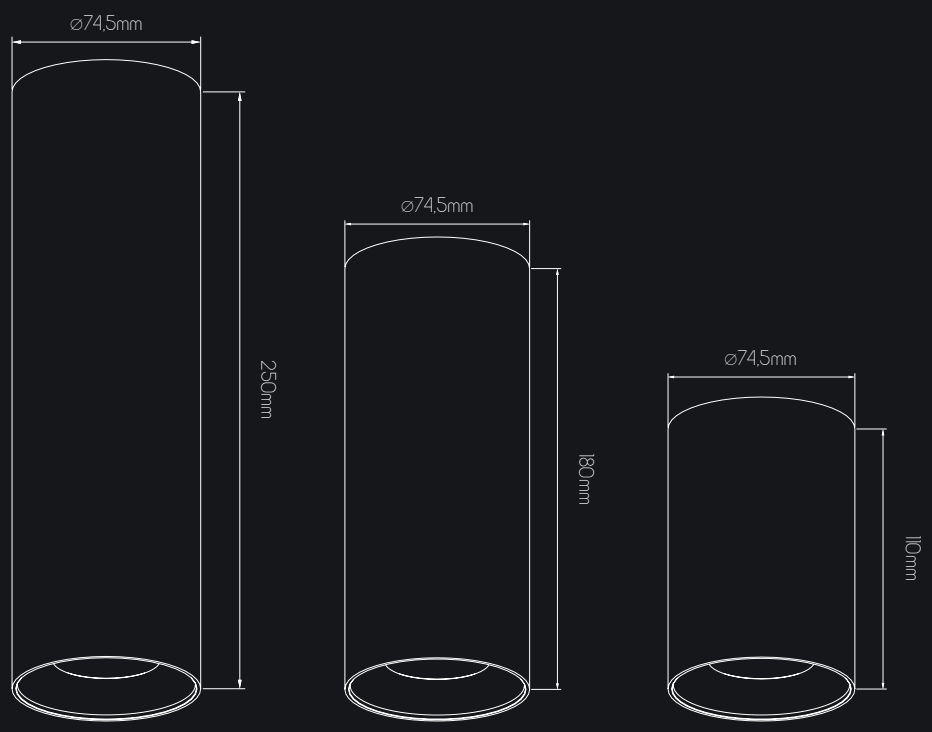

* Bulbs dimmable when used with the correct LED dimmer.

ZOOM

- Customizable colour schemes: choose your own colour combinations for the base and inserts
- Bases available in matte black, matte white, aluminium and dark copper brown
- Inserts available in matte black, matte white, aluminium, dark copper brown and gold
- Square bases for 1, 2, 3, 4 lights
- Round base for 1 light

Aluminium:

4014070	ZOOM 1 light base square
4014074	ZOOM 1 light base round
4014071	ZOOM 2 light base square
4014072	ZOOM 3 light base square
4014073	ZOOM 4 light base square

4014090	Insert I, 30° rotation
4014095	Insert II, 30° rotation with bevel
4014100	Insert III, no rotation, full bevel

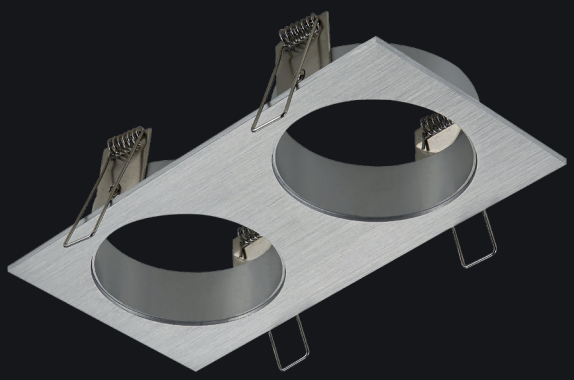

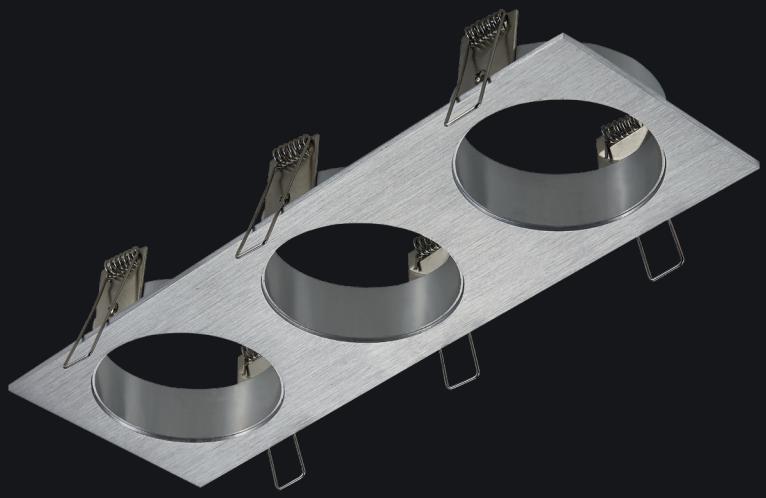

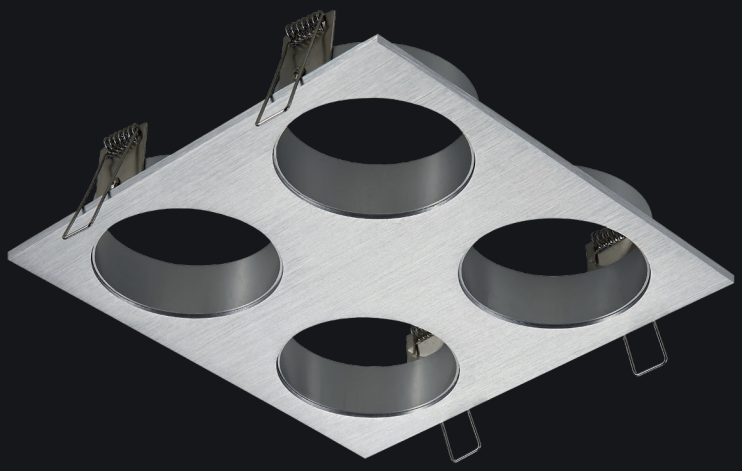

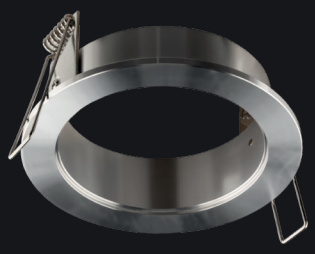

Create your own style!

Choose the size of the base: 1,2,3 or 4 light
Choose an insert: 3 distinct types and multiple colours available

Pick and match different types and colours to create unique pieces.

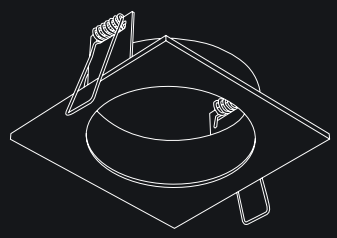

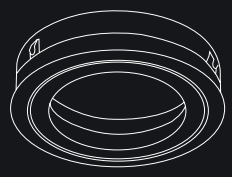

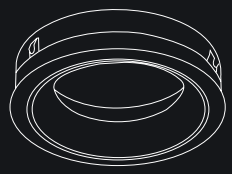

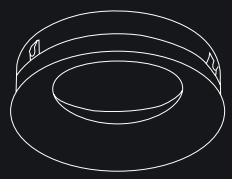

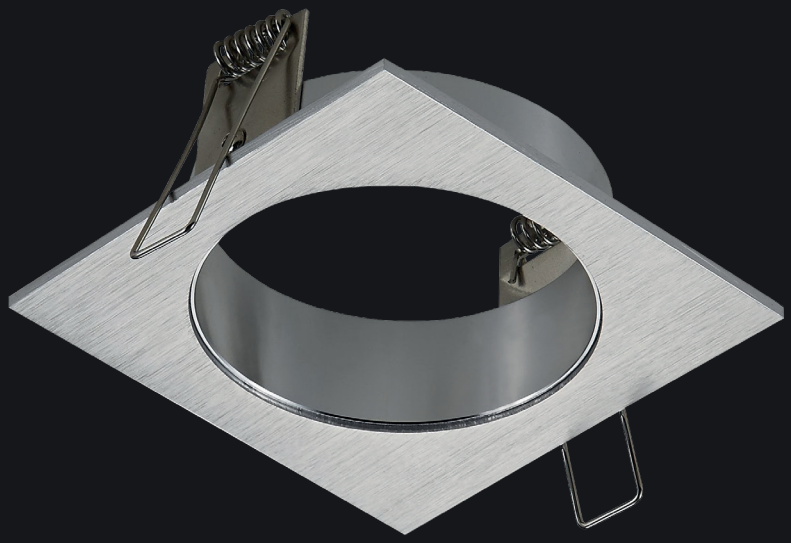

insert II

insert I

insert III

ZOOM

- Customizable colour schemes: choose your own colour combinations for the base and inserts
- Bases available in matte black, matte white, aluminium and dark copper brown
- Inserts available in matte black, matte white, aluminium, dark copper brown and gold
- Square bases for 1, 2, 3, 4 lights
- Round base for 1 light

Matte white:

4014075	ZOOM 1 light base square
4014079	ZOOM 1 light base round
4014076	ZOOM 2 light base square
4014077	ZOOM 3 light base square
4014078	ZOOM 4 light base square

4014091	Insert I, 30° rotation
4014096	Insert II, 30° rotation with bevel
4014101	Insert III, no rotation, full bevel

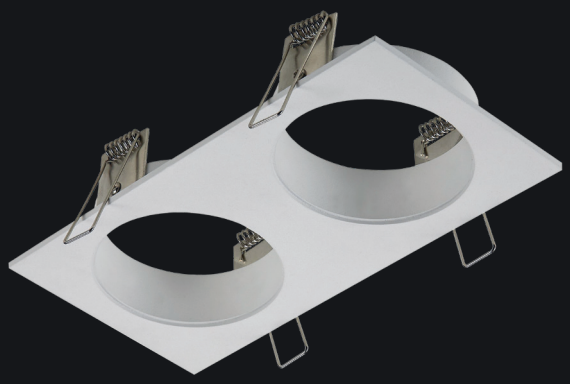

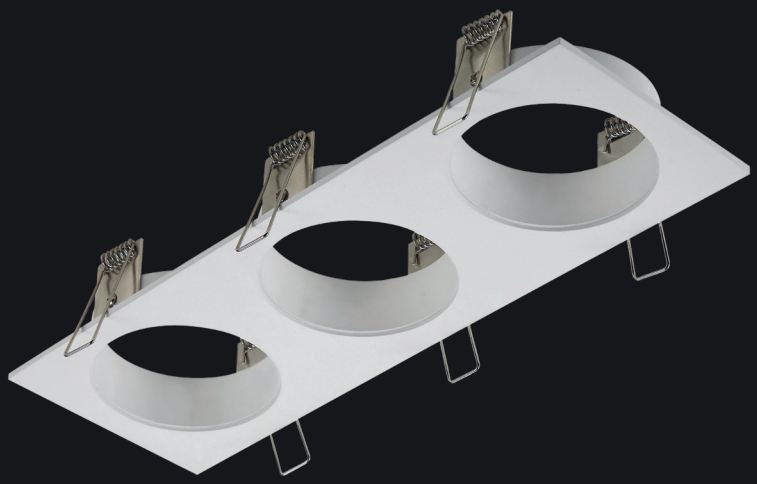

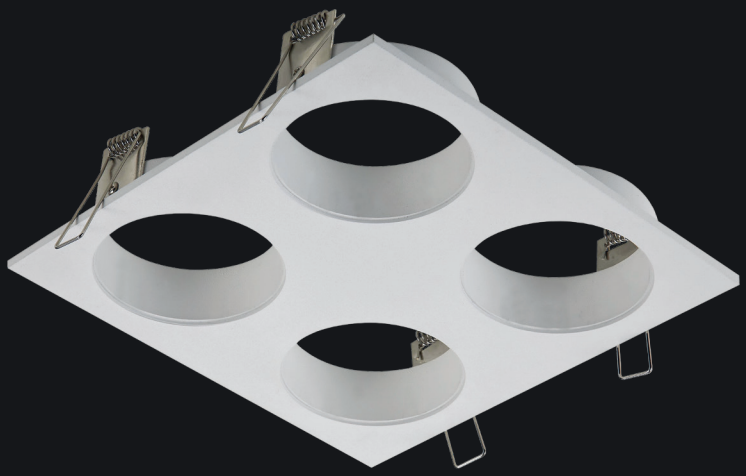

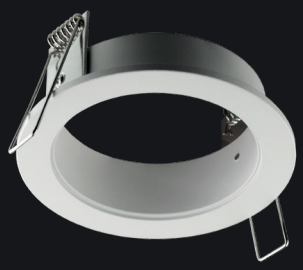

Create your own style!

Choose the size of the base: 1,2,3 or 4 light
Choose an insert: 3 distinct types and multiple colours available

Pick and match different types and colours to create unique pieces.

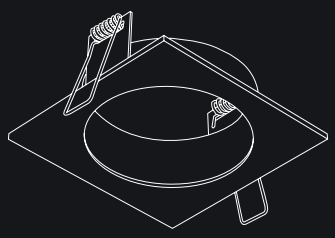

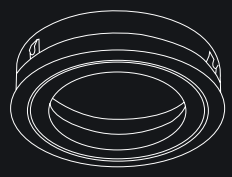

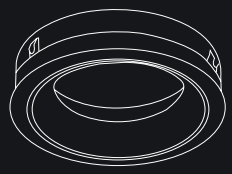

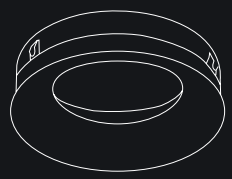

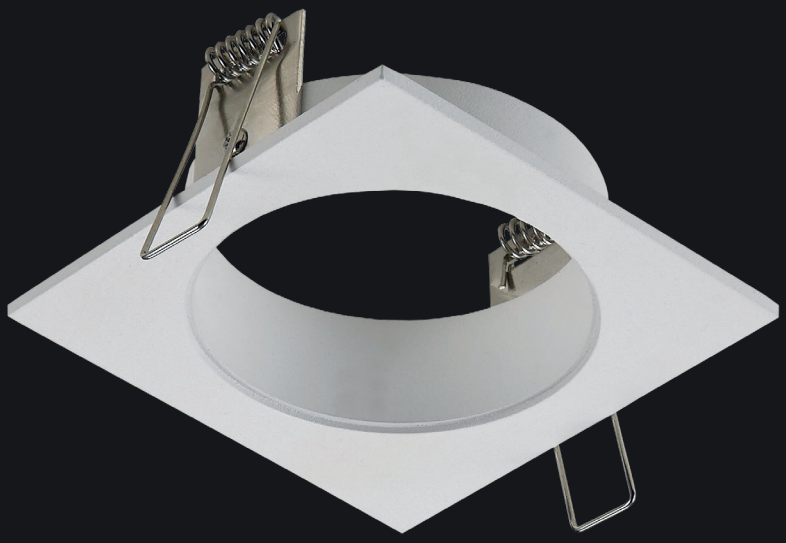

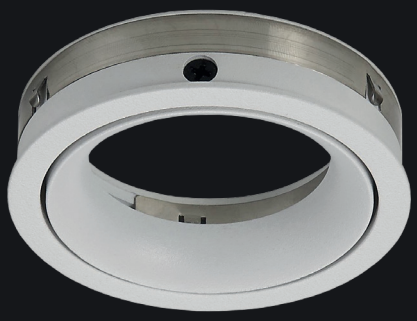

insert II

insert I

insert III

ZOOM

- Customizable colour schemes: choose your own colour combinations for the base and inserts
- Bases available in matte black, matte white, aluminium and dark copper brown
- Inserts available in matte black, matte white, aluminium, dark copper brown and gold
- Square bases for 1, 2, 3, 4 lights
- Round base for 1 light

Matte black:

4014080	ZOOM 1 light base square
4014084	ZOOM 1 light base round
4014081	ZOOM 2 light base square
4014082	ZOOM 3 light base square
4014083	ZOOM 4 light base square

4014092	Insert I, 30° rotation
4014097	Insert II, 30° rotation with bevel
4014102	Insert III, no rotation, full bevel

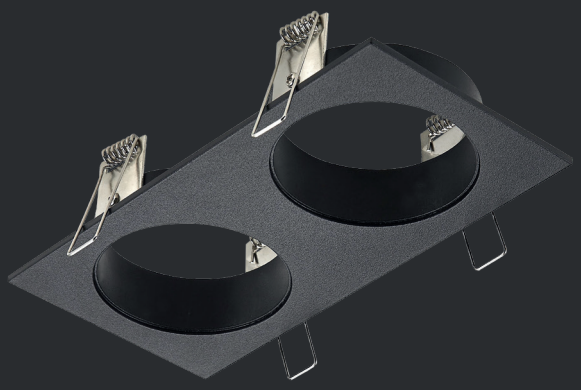

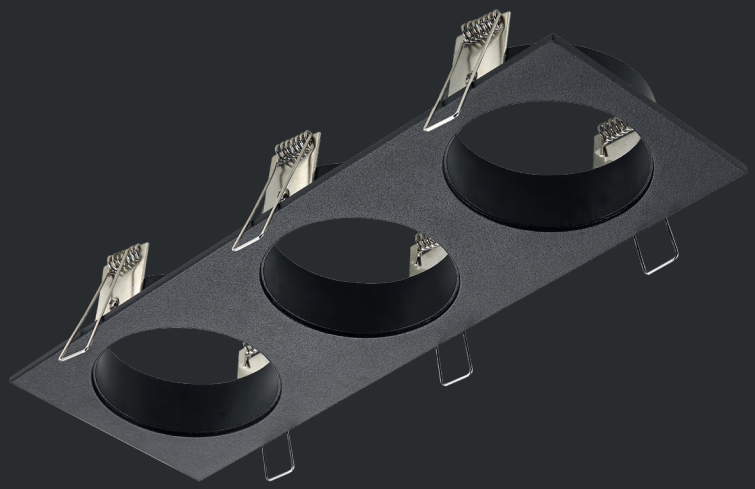

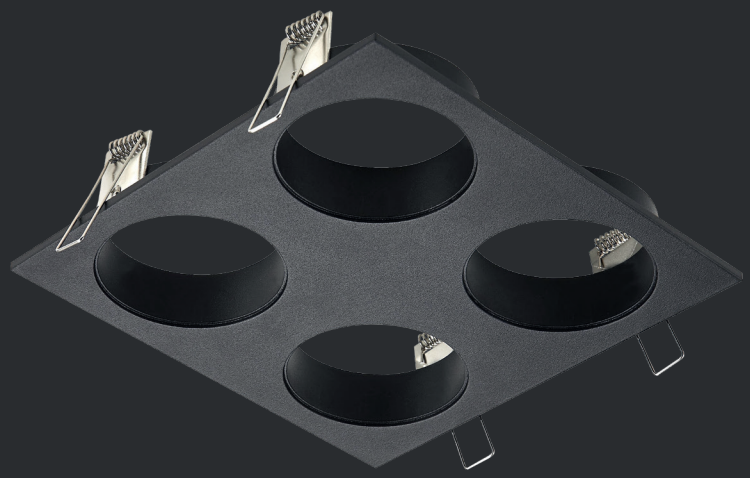

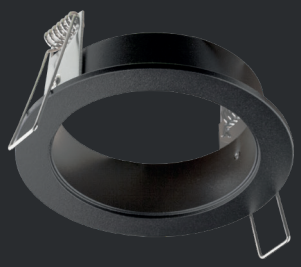

Create your own style!

Choose the size of the base: 1,2,3 or 4 light
Choose an insert: 3 distinct types and multiple colours available

Pick and match different types and colours to create unique pieces.

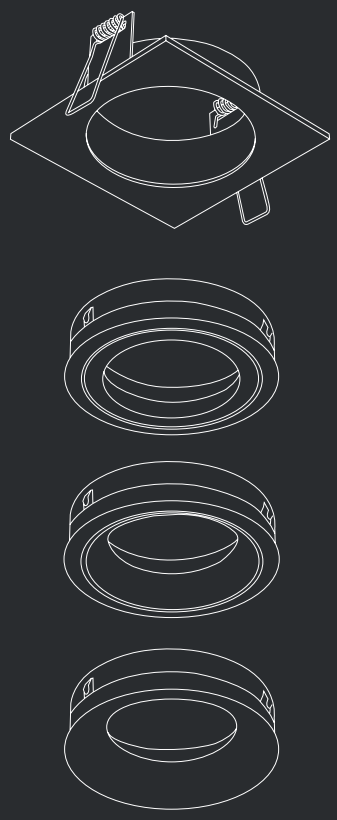

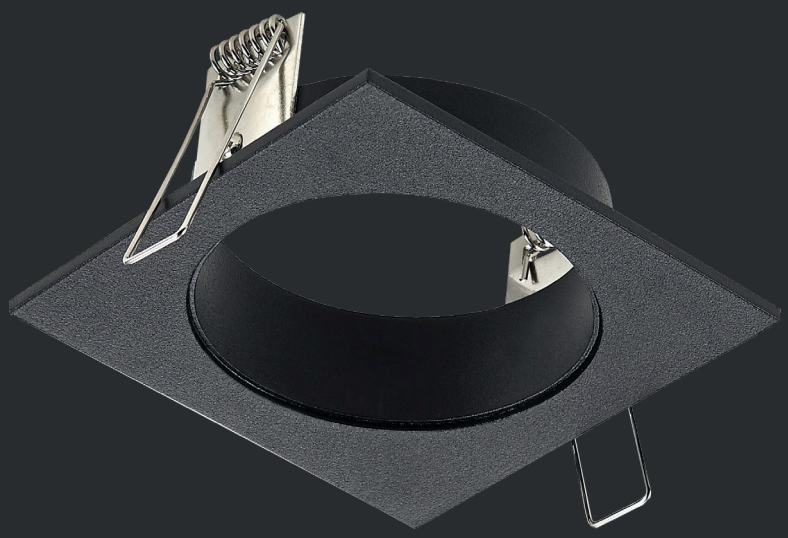

insert II

insert I

insert III

ZOOM

- Customizable colour schemes: choose your own colour combinations for the base and inserts
- Bases available in matte black, matte white, aluminium and dark copper brown
- Inserts available in matte black, matte white, aluminium, dark copper brown and gold
- Square bases for 1, 2, 3, 4 lights
- Round base for 1 light

Dark copper brown:

4014085	ZOOM 1 light base square
4014089	ZOOM 1 light base round
4014086	ZOOM 2 light base square
4014087	ZOOM 3 light base square
4014088	ZOOM 4 light base square

4014093	Insert I, 30° rotation
4014098	Insert II, 30° rotation with bevel
4014103	Insert III, no rotation, full bevel

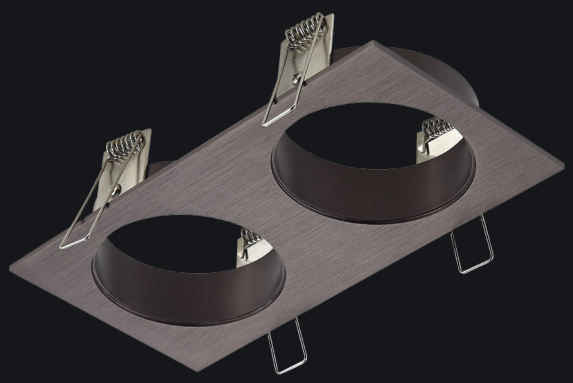

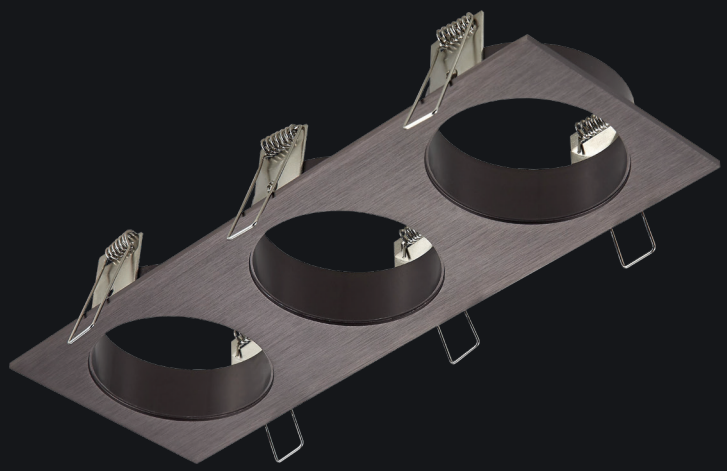

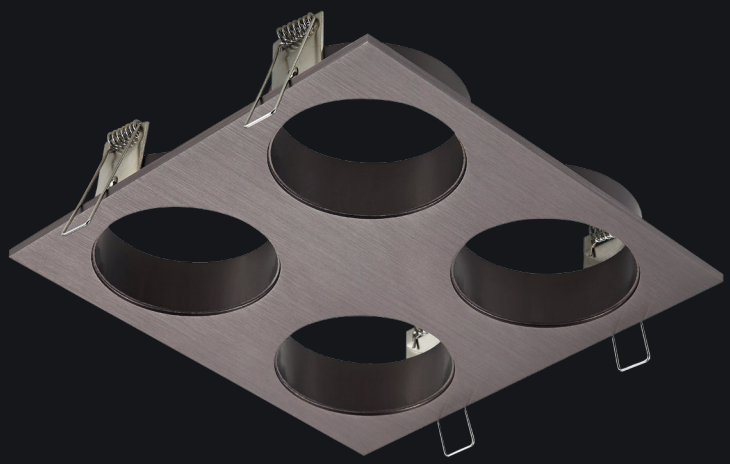

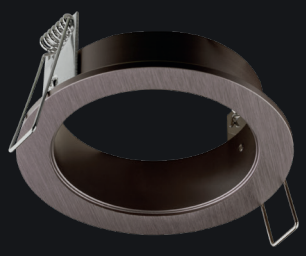

Create your own style!

Choose the size of the base: 1,2,3 or 4 light
Choose an insert: 3 distinct types and multiple colours available

Pick and match different types and colours to create unique pieces.

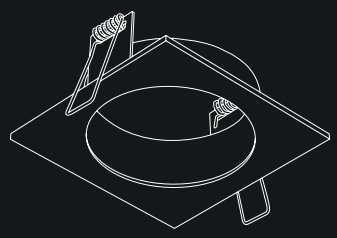

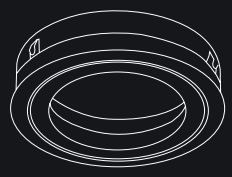

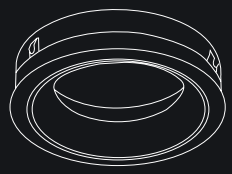

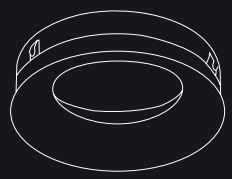

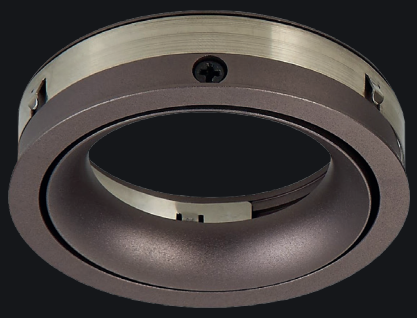

insert II

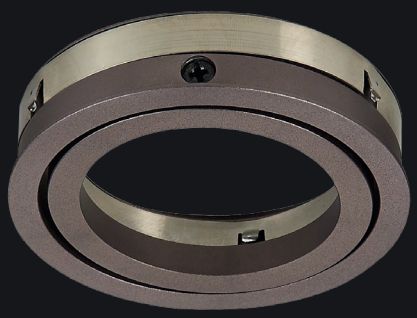

insert I

insert III

Extra insert options:

Gold insert:

4014099	Insert II, 30° rotation with bevel
4014104	Insert III, no rotation, full bevel

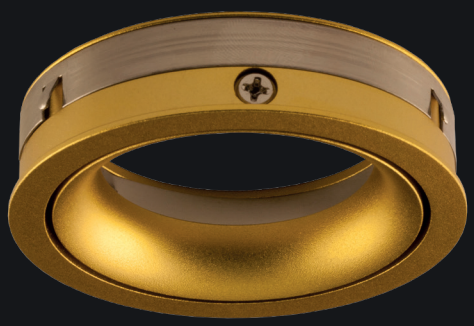

insert I

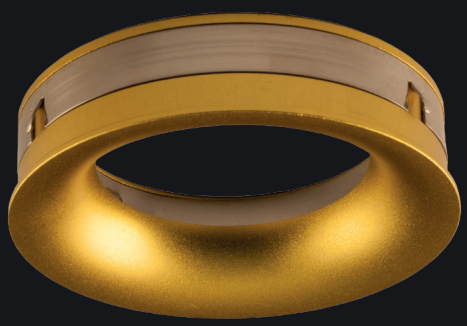

insert II

Extra insert options:

Sonar insert:

4014111	SONAR matte white, GU10 not included
4014112	SONAR matte black, GU10 not included

Extra insert options:

Lopal insert:

4014113	LOPAL insert, 4,5 Watt AC COB LED, matte white
4014114	LOPAL insert, 4,5 Watt AC COB LED, matte black

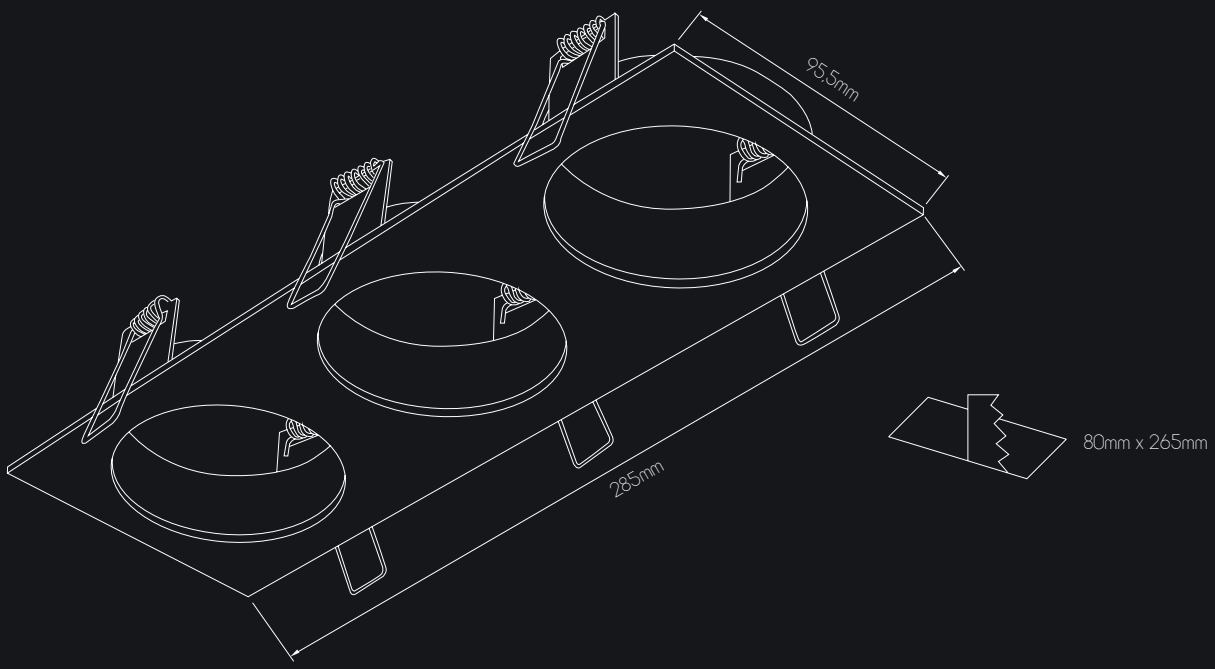
95.5mm
285mm
80mm x 265mm

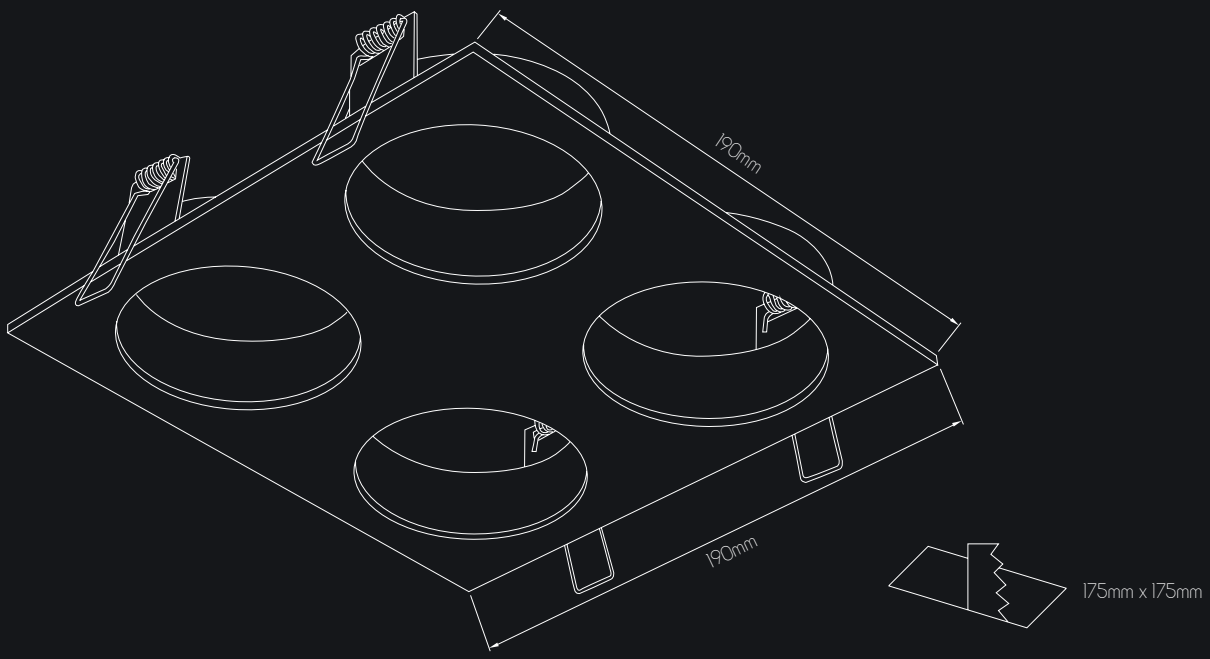
190mm
190mm
175mm x 175mm

ZOOM

Zoom Base

Zoom Inserts

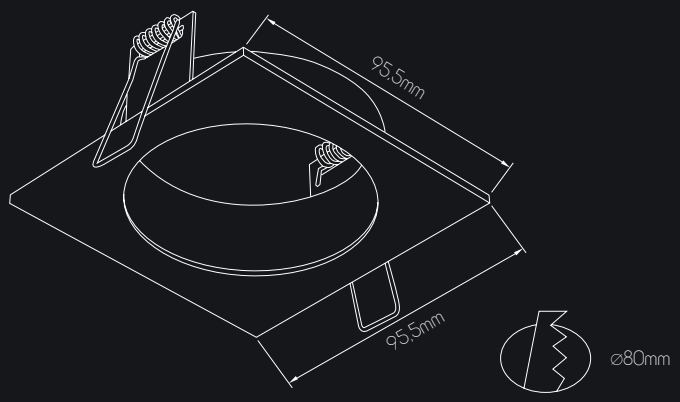

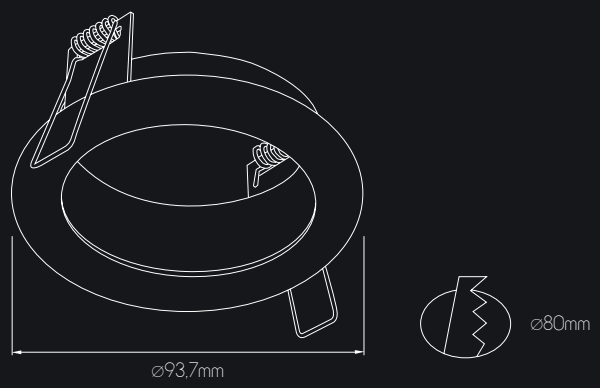

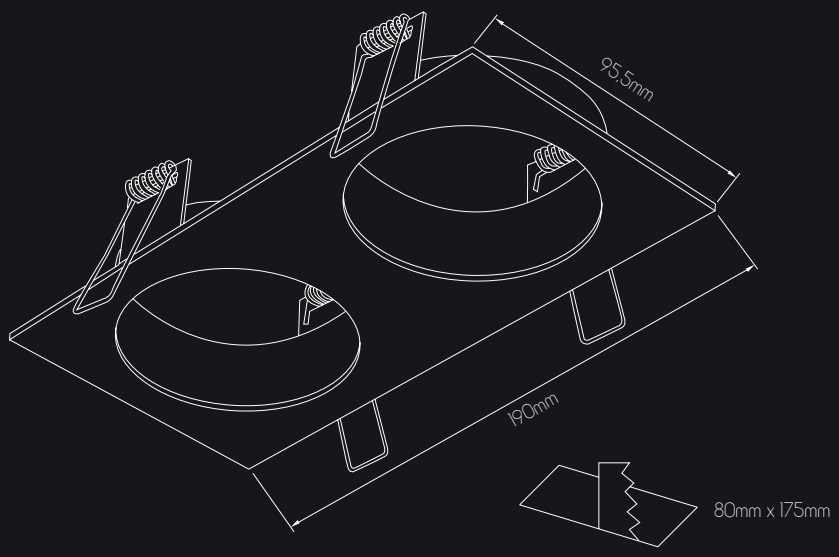

Bulbs not included

Recommended bulb:
Hybriz Gen 2 LED modules

Optional bulb (GU10):
8202652
8202650

Material: aluminium

Colour options:

Base:
- matte white
- matte black
- aluminium
- dark copper brown

Inserts:
- matte white
- matte black
- aluminium
- dark copper brown
- gold

Power: 220-240 Volt

Torsion springs and spring blades included for 1 light bases.

ZOOM AR111

- Complete with dimmable driver and powerful replaceable AR111 LED spots
- Warm white light, powerful lumen output
- Available in matte white and matte black
- 1 and 2 light versions

Matte white version:

4014120	ZOOM AR111 1 light, 1x AR111 LED 12,4 Watt included
4014125	ZOOM AR111 2 light, 2x AR111 LED 12,4 Watt included

Matte black version:

4014121	ZOOM AR111 1 light, 1x AR111 LED 12,4 Watt included
4014126	ZOOM AR111 2 light, 2x AR111 LED 12,4 Watt included

ZOOM AR111

AR111 LED 12,4 Watt 30° 2700K (8202705)
650 Lumen with lens cover
1386 Lumen without lens cover

AR111 LED bulb overview: page 140

Dimmable bulb 0-100% *

Dimmable driver included (3419052)

Material: aluminium

Colour: matte white
matte black

Power: 220-240 Volt

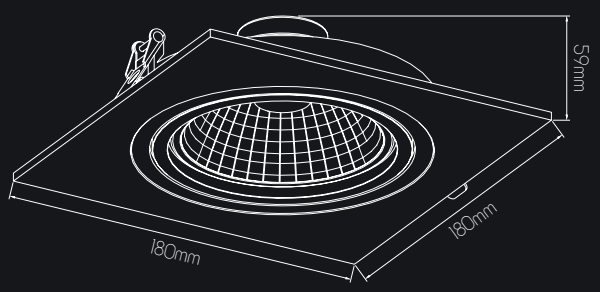

ø155mm

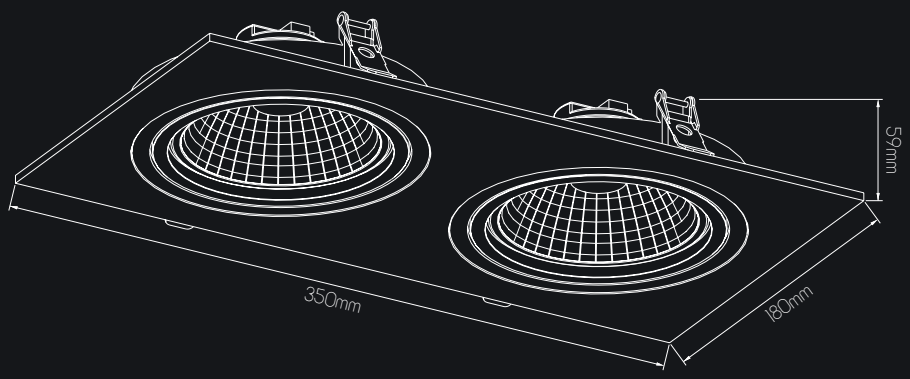

320mm x 155mm

* Bulbs dimmable when used with the correct LED dimmer.

HYBRIZ GEN2

Introduction

Instead of just being a simple request for energy efficiency, lighting nowadays is faced with more and more demands. It is very difficult, for traditional integrated lighting products, to offer every solution in different categories, from optical operation, light texture, light tone to appearance.

Hybriz generation 2 LED modules are intended to bring a new all-round product to the market.

These new modules have high quality internal components with a high CRI (>90), LEDs from Bridgelux, a long warranty of 5 years AND a flicker-free triac dimming system.

LED modules are sold without drivers or lenses.
Available drivers: triac dimmable, dali dimmable, 0-10V dimmable.
Recommended for use with Zoom and most other recessed spotlights for GU10.

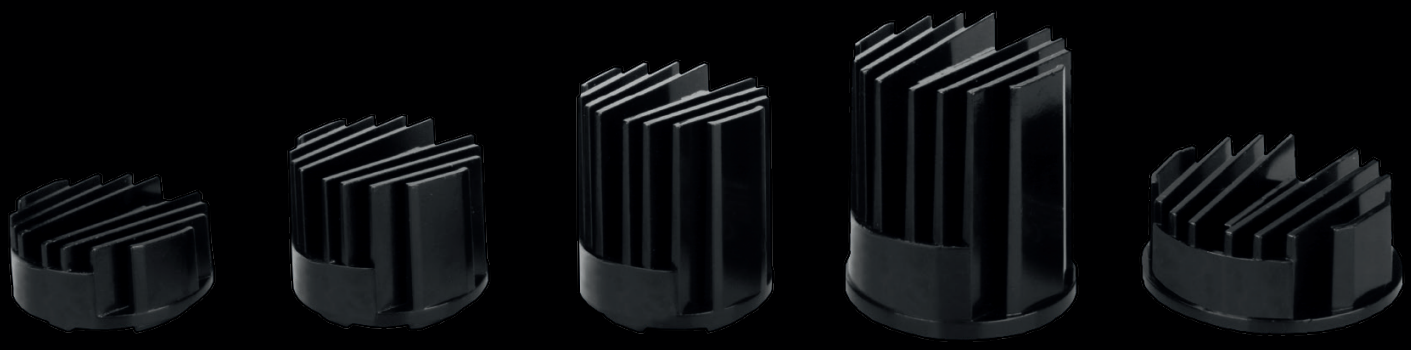

6 Watt | 9 Watt* | 13 Watt* | 18 Watt* | 10 Watt*

Low profile

In addition to the standard 6W LED module, the 10W LED module with its low profile is perfect for rooms with limited ceiling installation depth.

The LED module + Low Profile Lens has a maximum height of 35mm.

6 Watt module: 500-580 Lumen (2700K, 3000K, 4000K)
10 Watt module: 770-850 Lumen (2700K, 3000K, 4000K)

The Low Profile Lens (LPL) is available in 15 °, 24 °, 36 ° and 60 °

* 6 Watt LED module available / other modules (9, 13, 18, 10 Watt) available on demand, contact us for more details.

F-Connect

Connect LED modules and lenses in a quick and easy way.
All lenses are quickly replaced with the patented F-connect technology. Thus, the modules can easily meet the needs of different types of customers, and serve specific application areas.

Heatsink

The addition of a heat sink on the LED module offers the module maximum space to optimally release heat. The heat can be quickly dissipated via non-parallel heat fins and great air convection.

The temperature of the LED module averages 60°C and has a maximum temperature of 70°C.
The temperature will be lowered again if a lens is installed. The lenses are all made of aluminum, the same material as the heatsink.

HYBRIZ GEN2

Lenses

High efficiency lens*
High efficiency reflector*
Low profile lens
Low glare lens*
Architectural design lens

All lenses are made of aluminum and have a diameter of 50mm, ready for use in most recessed spot-lights suitable for GU10.

HEL Series

HER Series

LPL Series

LGL Series

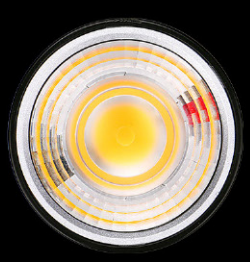

ADL Series

High Efficiency Lens Series (HEL)*

Classic reflector-like design provides high lighting transmittance.
15° 24° 36° 60°

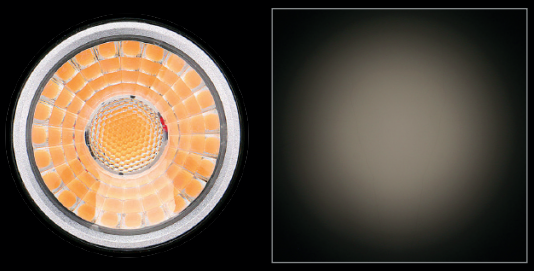

High Efficiency Reflector Series (HER)*

Similar to a traditional halogen lamp finish. The reflector surface is vacuum plated aluminum which creates a strong metal texture.
15° 25° 38° 60°

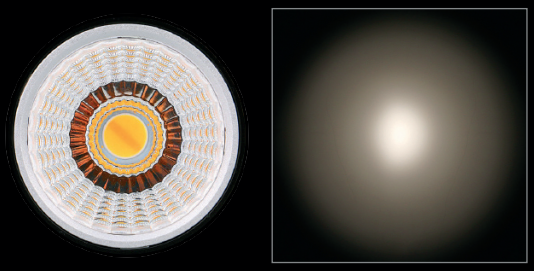

Low Profile Lens Series (LPL)

Designed with Fresnel & Calculus optical processing technology. The lens is very thin with good light control and is perfect for use in ultra slim luminaries.
15° 24° 36° 60°

Low Glare Lens Series (LGL)*

Designed with focus on comfort and suitable for professional anti-glare lamps.
18° 28° 38° 50°

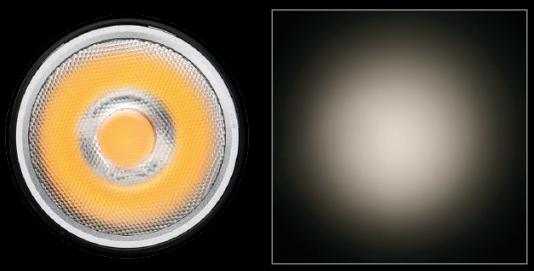

Architectural Design Lens Series (ADL)

ADL uses crossing light distribution technology which can greatly reduce the glare index. The anti-glare ring is available in 4 colours to meet the needs of different architectural styles. Available with white, black, gold and silver finish.
36°

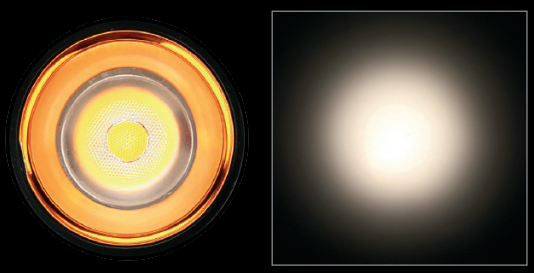

* Low profile and architectural lens available / other lenses available on demand, contact us for more details.

HYBRIZ GEN2

LED module overview

5Y WARRANTY

8300000 Low Profile
LED Module 6 Watt 40° 2700K
500 Lumen
CRI ›90

Dimmable bulb 0-100%

Dimmable driver sold separately
Lenses sold separately

8300001 Low Profile
LED Module 6 Watt 40° 3000K
540 Lumen
CRI ›90

Dimmable bulb 0-100%

Dimmable driver sold separately
Lenses sold separately

8300002 Low Profile
LED Module 6 Watt 40° 4000K
580 Lumen
CRI ›90

Dimmable bulb 0-100%

Dimmable driver sold separately
Lenses sold separately

8300003
LED Module 9 Watt 40° 2700K
770 Lumen
CRI ›90

Dimmable bulb 0-100%

Dimmable driver sold separately
Lenses sold separately

Available on demand, contact us for more details

8300004
LED Module 9 Watt 40° 3000K
830 Lumen
CRI ›90

Dimmable bulb 0-100%

Dimmable driver sold separately
Lenses sold separately

Available on demand, contact us for more details

8300005
LED Module 9 Watt 40° 4000K
850 Lumen
CRI ›90

Dimmable bulb 0-100%

Dimmable driver sold separately
Lenses sold separately

Available on demand, contact us for more details

5 years warranty on all LED modules.

HYBRIZ GEN2

LED module overview

5Y WARRANTY

8300006 Low Profile
LED Module 10 Watt 40° 2700K
770 Lumen
CRI ›90

Dimmable bulb 0-100%

Dimmable driver sold separately
Lenses sold separately

Available on demand, contact us for more details

8300007 Low Profile
LED Module 10 Watt 40° 3000K
830 Lumen
CRI ›90

Dimmable bulb 0-100%

Dimmable driver sold separately
Lenses sold separately

Available on demand, contact us for more details

8300008 Low Profile
LED Module 10 Watt 40° 4000K
850 Lumen
CRI ›90

Dimmable bulb 0-100%

Dimmable driver sold separately
Lenses sold separately

Available on demand, contact us for more details

8300009
LED Module 13 Watt 40° 2700K
1020 Lumen
CRI ›90

Dimmable bulb 0-100%

Dimmable driver sold separately
Lenses sold separately

Available on demand, contact us for more details

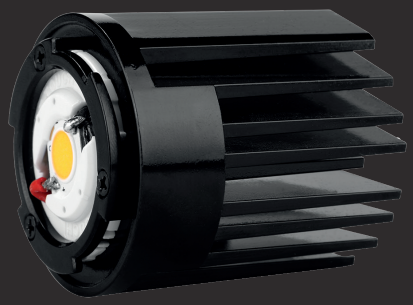

8300010
LED Module 13 Watt 40° 3000K
1170 Lumen
CRI ›90

Dimmable bulb 0-100%

Dimmable driver sold separately
Lenses sold separately

Available on demand, contact us for more details

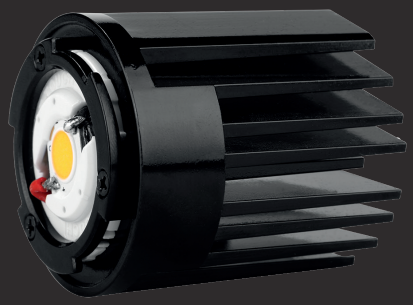

8300011
LED Module 13 Watt 40° 4000K
1300 Lumen
CRI ›90

Dimmable bulb 0-100%

Dimmable driver sold separately
Lenses sold separately

Available on demand, contact us for more details

5 years warranty on all LED modules.

HYBRIZ GEN2

LED module overview

5Y WARRANTY

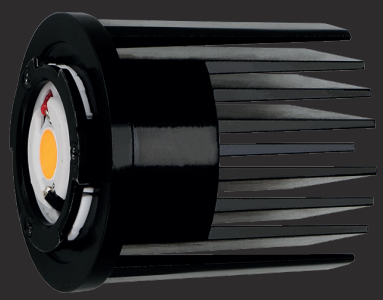

8300012
LED Module 18 Watt 2700K
1450 Lumen
CRI >90

Dimmable bulb 0-100%

Dimmable driver sold separately
Lenses sold separately

Available on demand, contact us for more details

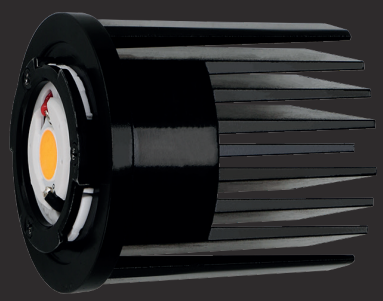

8300013
LED Module 18 Watt 3000K
1570 Lumen
CRI >90

Dimmable bulb 0-100%

Dimmable driver sold separately
Lenses sold separately

Available on demand, contact us for more details

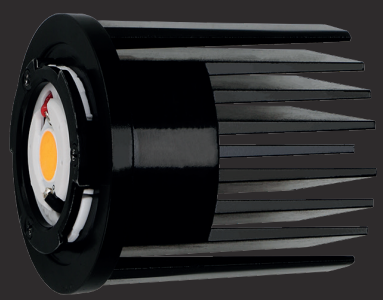

8300014
LED Module 18 Watt 4000K
1700 Lumen
CRI >90

Dimmable bulb 0-100%

Dimmable driver sold separately
Lenses sold separately

Available on demand, contact us for more details

The following LED modules are also available on demand for projects:

Dim To Warm LED Module
Dim your lights to change the light colour from 3000K to 1800K, CRI >95
Available in 6 Watt and 13 Watt

Sunlike LED Module
Light with a high CRI (97+), comparable to natural sunlight
Available in 6 Watt and 13 Watt, 2700K, 3000K, 4000K

Tuneable White LED Module
Freely change the light colour from 2700K to 6500K, CRI >90
Available in 6 Watt and 13 Watt

5 years warranty on all LED modules.

HYBRIZ GEN2

Accessories overview

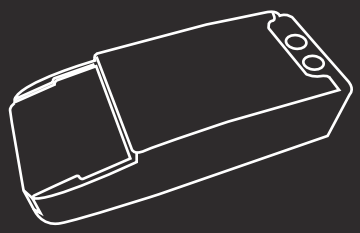

DRIVERS

TRIAC Dimmable

8300200	6 Watt DC34V / 130mA
8300201	9 Watt DC36V / 210mA *
8300202	10 Watt DC36V / 210mA *
8300203	13 Watt DC34V / 300mA *
8300204	18 Watt DC34V / 420mA *
8300205	6 Watt For Dim To Warm DC17V / 270mA *
3419055	Dali 2.0 Dimmable
3419056	0-10V Dimmable

LENSES

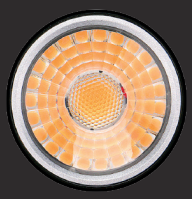

High Efficiency Lens (HEL) *

8300100: 15° 8300101: 24° 8300102: 36° 8300103: 60°

h: 26,5mm

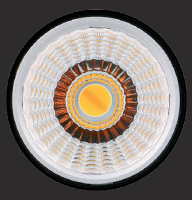

High Efficiency Reflector (HER) *

8300104: 15° 8300105: 25° 8300106: 38° 8300107: 60°

h: 26,5mm

Low Profile Lens (LPL)

8300108: 15° 8300109: 24° 8300110: 36° 8300111: 60°

h: 15,5mm

Low Glare Lens (LGL) *

8300112: 18° 8300113: 28° 8300114: 38° 8300115: 50°

h: 30mm

Architectural Design Lens (ADL)

8300116: white 8300117: black 8300118: gold 8300119: silver

h: 40,5mm

* Drivers 8300200, 3419055, 3419056 available / other drivers available on demand, contact us for more details.
* Low profile and architectural lens available / other lenses available on demand, contact us for more details.

3 years warranty on all drivers.

BULBS

8202650
GU10 LED 4,5 Watt 36° 2700K
246 Lumen (90°) CRI ›90

Dimmable bulb 0-100% *

Ø50mm - L60mm

Recommended for:
Nysit
Zoom

5Y WARRANTY

8202652
GU10 LED 5 Watt 30° 2700K
400 Lumen CRI ›80

Dimmable bulb 0-100% *

Ø50mm - L55mm

Recommended for:
Zoom
Zolan

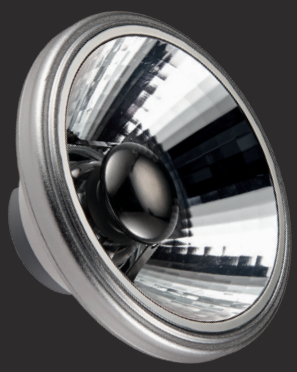

8202705
AR111 LED 12,4 Watt 30° 2700K CRI›80
650 Lumen with lens cover
1386 Lumen without lens cover

Dimmable bulb 0-100% *
Requires dimmable driver 3419052
Ø104mm - L54mm

Recommended for:
Aeon
Box
Zoom AR111

Also available:
8202704:
15° 2700K CRI›80

8202706:
15° 3000K CRI›80

8202707:
30° 3000K CRI›80

8202708:
15° 4000K CRI›80

8202709:
30° 4000K CRI›80

* Bulbs dimmable when used with the correct LED dimmer.

DISCLAIMER

Fantasia Verlichting® n.v. has realized this catalogue for any person involved in the lighting business. Our hope is that it will be an efficient tool that can contribute to the creativity of the lighting designers. All designs are protected by deposit of the models and © COPYRIGHT. All products in this catalogue are made according to CE regulations.
© COPYRIGHT Fantasia Verlichting® n.v.

No part of this catalogue may be copied or reproduced without written approval of Fantasia Verlichting® n.v. Information in this catalogue is without engagement and may be subject to changes without notice.
Premium Collection edition 2023

Fantasia Verlichting® n.v. stelde deze catalogus samen voor iedereen die in contact komt met de verlichtingswereld. Het is onze hoop dat dit een efficiënte "tool" en inspiratiebron wordt.
Alle designs zijn beschermd door het © COPYRIGHT en deposito bij een merkenburo.
Alle producten in deze catalogueus zijn vervaardigd volgens de algemeen geldende europese normen.
© COPYRIGHT Fantasia Verlichting® n.v.

Niets uit deze catalogus mag gekopieerd of verveelvoudigd worden zonder de uitdrukkelijke schriftelijke toestemming van Fantasia Verlichting® n.v. Informatie in deze catalogueus is op geen enkele manier bindend en kan gewijzigd worden zonder voorafgaande kennisgeving.
Premium Collection editie 2023

Fantasia Verlichting® n.v. a créé ce catalogue pour toutes les personnes qui s'intéressent à l'éclairage. Nous espérons que cet outil contribuera à créer un atmosphère plus efficace et plus créatif.
Tous les modèles de sont protégés par un © COPYRIGHT et ont été déposés auprès d'un bureau de marques.
Tous les produits repris dans ce catalogue ont été fabriqués conformément aux normes CE.
© COPYRIGHT Fantasia Verlichting® n.v.

Le contenu de ce catalogue ne peut être copié et/ou multiplié et/ou publié sous aucune forme et sur aucun support, sans l'autorisation spécifique écrite de Fantasia Verlichting® n.v.
Les renseignements repris dans ce catalogue sont données à titre informatif et peuvent être modifiés sans avertissement préalable.
Premium Collection édition 2023

Coming soon

Noma

Ready for E27 bulbs
Available in matte black with gold and matte white with gold

Scan to discover
more new items.
Updated regularly!

AKO

With dimmable led and dimmer included
Available in matte black with gold and matte white with gold

Showroom
Fantasia Verlichting® n.v.
Torhoutsesteenweg 437
B-8400 Oostende
Belgium

Warehouse & Offices
Fantasia Verlichting® n.v.
Archimedesstraat 58
B-8400 Oostende
Belgium

Registered Office
Fantasia Verlichting® n.v.
Torhoutsesteenweg 437
B-8400 Oostende
Belgium

Telephone: +32 59 70 40 70
Fax: +32 59 70 77 33
E-mail: info@fantasia.be
Website: www.fantasia.be
VAT: BE0407 820 266

fantasia.be®

light designers

Fantasia Verlichting NV - Torhoutsesteenweg 437 - 8400 Oostende - Belgium
www.fantasia.be - info@fantasia.be
Tel: +3259 704070 - Fax: +3259 707733